COGNEX

DS900 Series Displacement Sensors

Reference

FOR INTERNAL USE

2025 December 29

Revision: 9.25.0 SR1.3

Legal Notices

The software described in this document is furnished under license, and may be used or copied only in accordance with the terms of such license and with the inclusion of the copyright notice shown on this page. Neither the software, this document, nor any copies thereof may be provided to, or otherwise made available to, anyone other than the licensee. Title to, and ownership of, this software remains with Cognex Corporation or its licensor. Cognex Corporation assumes no responsibility for the use or reliability of its software on equipment that is not supplied by Cognex Corporation. Cognex Corporation makes no warranties, either express or implied, regarding the described software, its merchantability, non-infringement or its fitness for any particular purpose.

The information in this document is subject to change without notice and should not be construed as a commitment by Cognex Corporation. Cognex Corporation is not responsible for any errors that may be present in either this document or the associated software.

Companies, names, and data used in examples herein are fictitious unless otherwise noted. No part of this document may be reproduced or transmitted in any form or by any means, electronic or mechanical, for any purpose, nor transferred to any other media or language without the written permission of Cognex Corporation.

2025 December 29 11:33 AM

Revision: 9.25.0 SR1.3

Copyright © 2015. Cognex Corporation. All Rights Reserved.

Portions of the hardware and software provided by Cognex may be covered by one or more U.S. and foreign patents, as well as pending U.S. and foreign patents listed on the Cognex web site at: cognex.com/patents.

The following are registered trademarks of Cognex Corporation:

Cognex, 2DMAX, Advantage, AlignPlus, Assemblyplus, Check it with Checker, Checker, Cognex Vision for Industry, Cognex VSOC, CVL, DataMan, DisplayInspect, DVT, EasyBuilder, Hotbars, IDMax, In-Sight, Laser Killer, MVS-8000, OmniView, PatFind, PatFlex, PatInspect, PatMax, PatQuick, SensorView, SmartView, SmartAdvisor, SmartLearn, UltraLight, Vision Solutions, VisionPro, VisionView

The following are trademarks of Cognex Corporation:

The Cognex logo, 1DMax, 3D-Locate, 3DMax, BGAII, CheckPoint, Cognex VSoC, CVC-1000, FFD, iLearn, In-Sight (design insignia with cross-hairs), In-Sight 2000, InspectEdge, Inspection Designer, MVS, NotchMax, OCRMax, PatMax RedLine, ProofRead, SmartSync, ProfilePlus, SmartDisplay, SmartSystem, SMD4, VisiFlex, Xpand

Portions copyright © Microsoft Corporation. All rights reserved.

Portions copyright © MadCap Software, Inc. All rights reserved.

Other product and company trademarks identified herein are the trademarks of their respective owners.

DRAFT

Preface

This document describes the Cognex Displacement Sensors DS900 series.

Symbols

The following symbols indicate safety precautions and supplemental information:

WARNING: This symbol indicates a hazard that could cause death, serious personal injury or electrical shock.

CAUTION: This symbol indicates a hazard that could result in property damage.

Note: This symbol indicates additional information about a subject.

Tip: This symbol indicates suggestions and shortcuts that might not otherwise be apparent.

DRAFT

Precautions

To reduce the risk of injury or equipment damage, observe the following precautions when you install the Cognex product:

- This product is intended for industrial use in automated manufacturing or similar applications.
- The safety of any system incorporating this product is the responsibility of the assembler of the system.
- Route cables and wires away from high-current wiring or high-voltage power sources to reduce the risk of damage or malfunction from the following causes: over-voltage, line noise, electrostatic discharge (ESD), power surges, or other irregularities in the power supply.
- Changes or modifications not expressly approved by the party responsible for regulatory compliance could void the user's authority to operate the equipment.
- Ensure that the cable bend radius begins at least six inches from the connector. Cable shielding can be degraded or cables can be damaged or wear out faster if a service loop or bend radius is tighter than 10X the cable diameter.
- This device is certified for office use only and if used at home, there can be frequency interference problems.
- This device should be used in accordance with the instructions in this manual.
- All specifications are for reference purposes only and can change without notice.
- This product does not contain user-servicable parts. Do not make electrical or mechanical modifications to product components. Unauthorized modifications can void your warranty.
- This device should be used in accordance with the instructions in this manual.

DRAFT

Laser Models

The following sensors contain a class 2M laser:

Model	Class 2M Laser
DS910B (820-9166-1R) DS925B (820-9164-1R)	√

Laser Safety Warnings

LASER LIGHT, DO NOT STARE INTO BEAM: CLASS 2M LASER PRODUCT
FAILURE TO FOLLOW THESE INSTRUCTIONS MAY CAUSE SERIOUS INJURY

Cognex places the following labels on every 3D displacement sensor:

DS925B

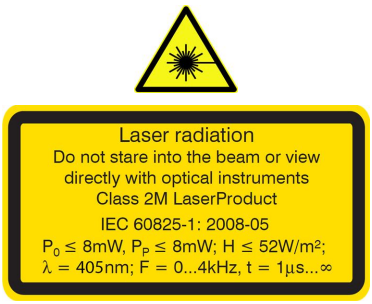

DS910B

Label Locations

DS925B (820-9164-1R)

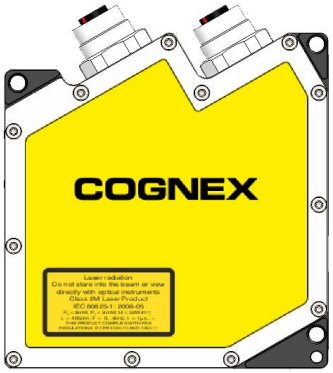

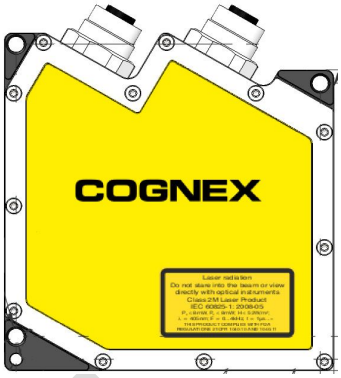

DS910B (820-9166-1R)

All DS900 Series Sensors

LASER LIGHT, DO NOT STARE INTO BEAM: CLASS 2M LASER PRODUCT

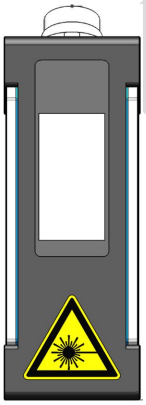

Label Location

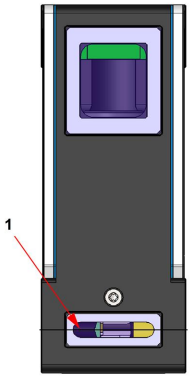

1 - Laser window

AVOID EXPOSURE - LASER RADIATION IS EMITTED FROM THIS APERTURE

DRAFT

Warnings and Notices

Cognex provides the following warnings and notices:

- Do not stare into the beam.
- Do not view directly with optical instruments (magnifiers).
- Do not place optical components (mirrors) into the beam.
- Design test fixtures in such a way that unintentional viewing of the beam is prevented.
- Switch off the laser when not in use.
- Avoid the use of highly reflective materials. If you cannot, try to angle the part so unintentional viewing of the reflection is prevented.
- Terminate (block) unused beams.
- Keep the laser plane horizontal or pointing downwards.
- Report any issues that may have an impact on laser safety to your supervisor or Laser Safety Officer.
- There is no scheduled maintenance necessary to keep the product in compliance.
- Under no circumstances should you operate the sensor if it is defective or the seal damaged. Cognex Corporation cannot be held responsible for any harm caused by operating a faulty unit.
- Under no circumstances should you modify in any way the sensor or its housing.
- Use of controls or adjustments or performance of procedures other than those specified herein may result in hazardous radiation exposure.
- When moving the unit from a very hot environment to a cold environment please allow the unit to equalize in a room temperature environment for 2 hours between temperature extremes.

If you need more information on the collection, reuse, and recycling systems, please contact your local or regional waste administration. You may also contact your supplier for more information on the environmental performance of this product.

Product Service

- Bring any performance issues to the attention of your Cognex sales representative.
- The sensor can only be serviced by a trained Cognex representative. Return the unit to Cognex for any service or repairs.
- Do not operate the sensor if the enclosure appears damaged.

Safely Handling

- Retain the original packaging supplied by Cognex and re-use it whenever you ship your sensor.
- Follow the instructions in *Sensor Maintenance* on page 9 for details on cleaning the sensor.
- Always observe the environmental limits. Subjecting the unit to shock, vibration or rough handling in excess of the specified limits can cause the sensor to fail.
- Do not store or install your sensor in excessively hot, cold, dusty, or damp environments.
- For laser safety information, see *Laser Models* on page 4.
- For electrical safety information, see *Power Supply* on page 21.

DRAFT

Cognex 3D Displacement Sensors

Cognex 3D displacement sensors combine GigE Vision and laser-stripe illumination to generate information about three-dimensional objects that cannot easily be generated by cameras that acquire two-dimensional images. The sensor offers highly accurate physical object measurements by analyzing the shape of the laser stripe as it appears to the camera (which is positioned at an angle to the laser).

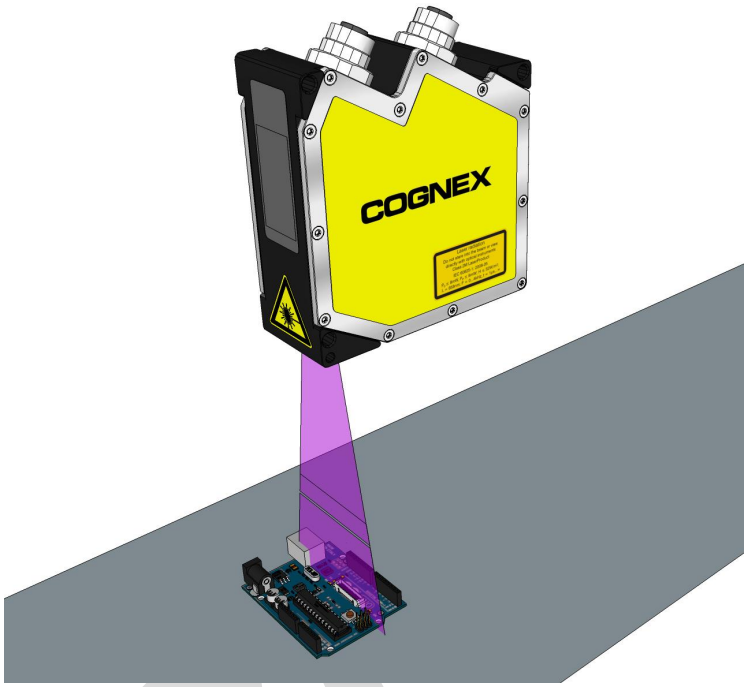

The image of the laser stripe represents a cross-section of the object under inspection. Your application might use this cross-section data, or you can use a 3D displacement sensor to acquire a series of images while the object moves past and then combine the height data of each image to generate a synthetic 2D image containing height profile information in real-world coordinates.

DRAFT

Accessories

The following optional components can be purchased separately. For a list of options and accessories, contact your Cognex sales representative.

Ethernet Cables

Note: This cable is not compatible with the DS1000 series.

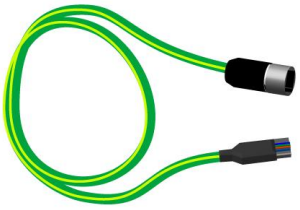

Length	Description	Part Number
5m	M12 to RJ-45, straight	CCB-2901858-05

Multifunction Cable

For more information, refer to *Multifunction Port* on page 24 for the pin-out of the unterminated flying leads.

Note: This cable is required if PoE is not used to power the sensor.

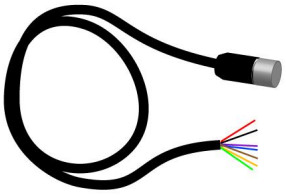

Length	Description	Part Number
5m	Cable Power, I/O, and Encoder, M12 to flying lead, straight	CCB-2901868-05

DRAFT

Sensor Maintenance

The windows to the camera and laser must be kept clean and free of defects to ensure proper operation. Any scratches, dust or dirt will impact the accuracy of acquired images.

CAUTION: Use care not to damage the anti-reflective coating on the windows.

Cognex makes the following recommendations for cleaning the laser and camera windows:

- Unplug the unit so the laser cannot be enabled.
- Use lint-free tissue or an optical grade cotton swab ("Q-tip").
- Use reagent-grade isopropyl alcohol.
- Use minimal pressure.
- Use several tissues or swabs.
- Start at the center of each window and spiral out to the edges.
- Rotate the tissue or swab during cleaning so dirt is not dragged across the surface.

DRAFT

System Layout

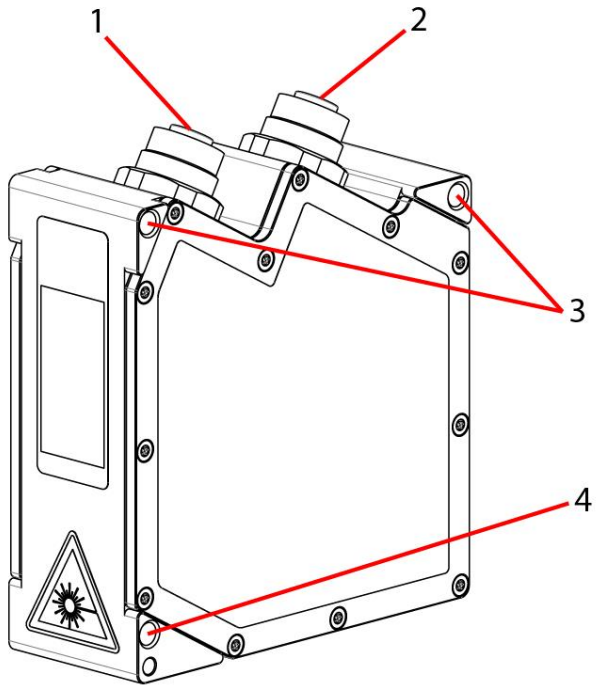

Component	Description
1	Ethernet socket
2	Multifunction socket (24V DC power + I/O connector)
3	M5 threaded mounting holes
4	This pin hole is provided for a position locking pin. The sensor can be mounted reproducible and replaceable together with an attachment point.

DRAFT

Bottom View

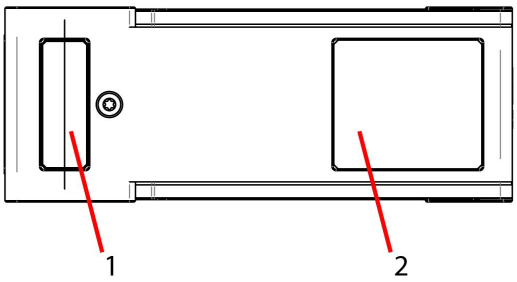

Component	Description
1	Laser window ⚠ **CAUTION**: AVOID EXPOSURE - LASER RADIATION IS EMITTED FROM THIS APERTURE
2	Camera window

System LEDs

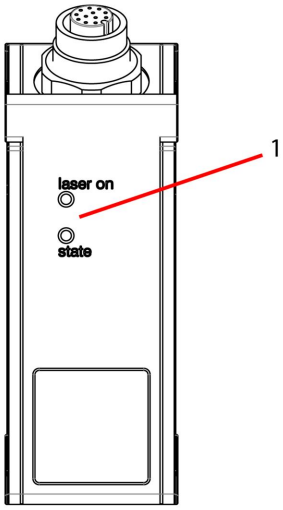

Component	Description	
Laser On	Indicates the laser is on.	
State	Solid green	Measuring
	Green flashing	Data transmission: • Long flashes for data transmission. • Short for access to vision controller.
	Red flashing	Error code.

DRAFT

DS910B Sensor Specifications

Specification	DS910B
Weight	440 g
Dimensions	118.5 mm (H) x 33 mm (W) x 85 mm (L)
Operating Temperature	0ºC to 45ºC (32ºF to 113ºF)
Storage Temperature	-20ºC to 70ºC (-4ºF to 158ºF)
Maximum Humidity	5% - 95% (non-condensing)
Environmental	IP65 (with Cognex recommended IP65 Ethernet and Power and I/O cables)
Laser Power	7mW (class 2M) at 405nm wavelength
Power Supply Requirements	Voltage: +24 VDC (11-30 VDC) Current: 500 mA max IEEE 802.3af Power over Ethernet
Discrete I/O Operating Limits	Input voltage limits: 0 VDC to +30 VDC Input ON: > 2.4 VDC (TTL); > 11 VDC (HTL) Input OFF: < 0.8 VDC (TTL); < 3 VDC (HTL)
Encoder Input Specification	Single -ended: A+/B+: 5-24V; A-/B-: +0VDC
Scan Rate	Up to 1.2 kHz
Ethernet	• Gigabit Ethernet interface • Standard M12-8 female connector
Certifications	CE

DRAFT

DS910B Series Technical Data

Data	DS910B
Measuring Range Z-axis	8 mm
Start of Measuring Range	52.5 mm
End of Measuring Range	60.5 mm
Line Length Midrange (X-axis)	10 mm
Linearity[1]	± 0.17 % FSO (3 σ)
Resolution X-axis	1280 points/profile
Light Source Laser	Semiconductor laser, approx. 405 nm, 10° aperture angle, Laser class 2M: laser power 7 mW, reduced 2 mW
Displays	1x state / 1x laser on
Electromagnetic Compatibility (EMC)	According to: EN 61326-1: 2006-10 DIN EN 55011: 2007-11 (Group 1, Class B) EN 61000-6-2: 2006-03

FSO = Full Scale Output | MMR = Midrange

DRAFT

[1] Based on a Cognex Optronic standard target with metallic finished surfaces.

Dimensions (DS910B)

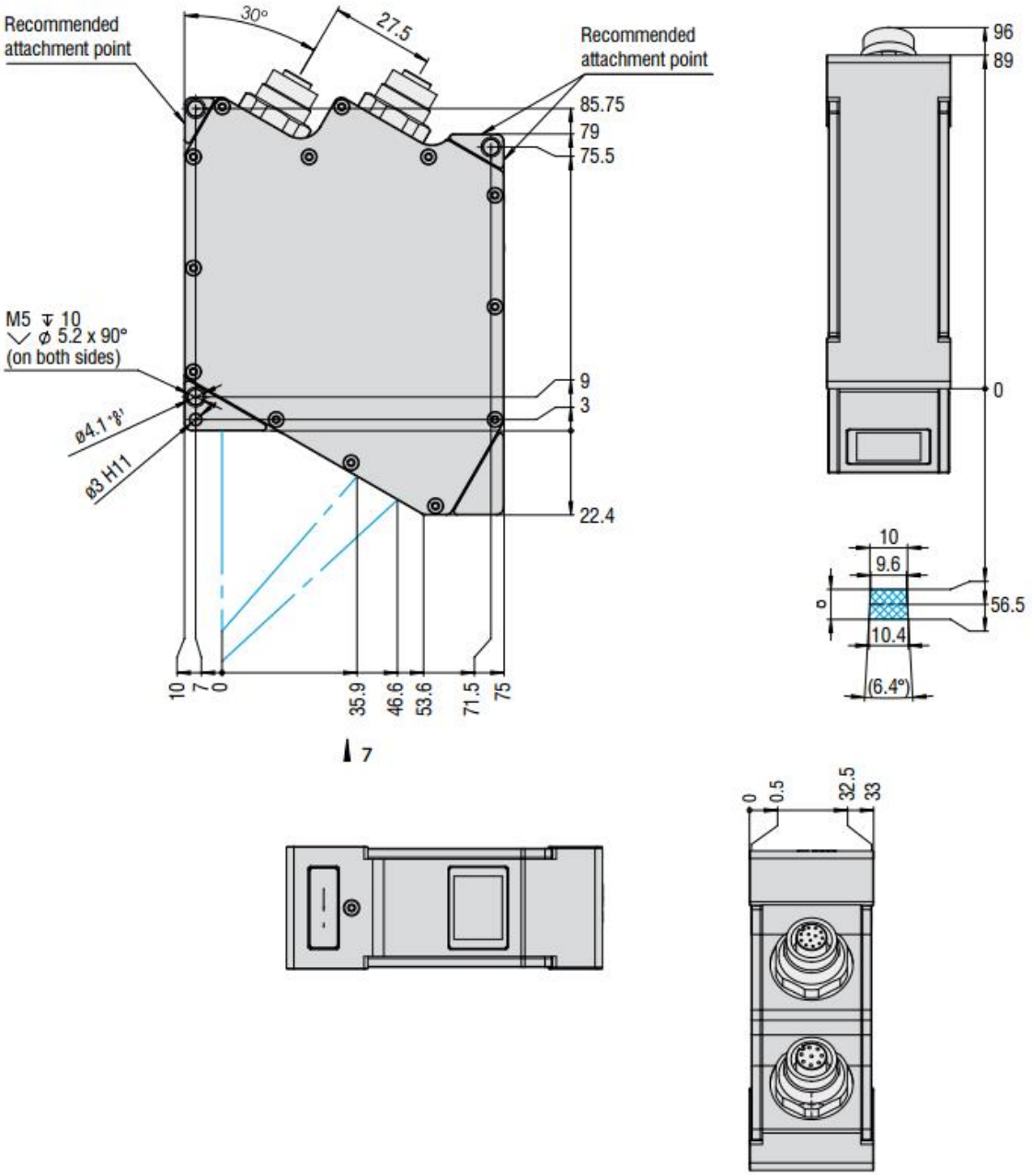

DS925B Sensor Specifications

Specification	DS925B
Weight	380 g
Dimensions	96 mm (H) x 33 mm (W) x 85 mm (L)
Operating Temperature	0ºC to 45ºC (32ºF to 113ºF)
Storage Temperature	-20ºC to 70ºC (-4ºF to 158ºF)
Maximum Humidity	5% - 95% (non-condensing)
Environmental	IP65 (with Cognex recommended IP65 Ethernet and Power and I/O cables)
Laser Power	8mW (class 2M) at 405nm wavelength
Power Supply Requirements	Voltage: +24 VDC (11-30 VDC) Current: 500 mA max IEEE 802.3af Power over Ethernet
Discrete I/O Operating Limits	Input voltage limits: 0 VDC to +30 VDC Input ON: > 2.4 VDC (TTL); > 11 VDC (HTL) Input OFF: < 0.8 VDC (TTL); < 3 VDC (HTL)
Encoder Input Specification	Single -ended: A+/B+: 5-24V; A-/B-: +0VDC
Scan Rate	Up to 1.2 kHz
Ethernet	• Gigabit Ethernet interface • Standard M12-8 female connector
Certifications	CE

DRAFT

DS925B Series Technical Data

Data	DS925B
Measuring Range Z-axis	25 mm
Start of Measuring Range	53.5 mm
End of Measuring Range	78.5 mm
Start of Measuring Range, Extended, Approx.	53 mm
End of Measuring Range, Extended, Approx.	79 mm
Line Length Midrange (X-axis)	25 mm
Linearity[1]	± 0.16 % FSO (3 σ)
Resolution X-axis	1280 points/profile
Light Source Laser	Semiconductor laser, approx. 405 nm, 20°... 25° aperture angle, Laser class 2M: laser power 8 mW, reduced 2 mW
Displays	1x state / 1x laser on
Electromagnetic Compatibility (EMC)	According to: EN 61326-1: 2006-10 DIN EN 55011: 2007-11 (Group 1, Class B) EN 61000-6-2: 2006-03

FSO = Full Scale Output | MMR = Midrange

DRAFT

[1] Based on a Cognex Optronic standard target with metallic finished surfaces.

Dimensions (DS925B)

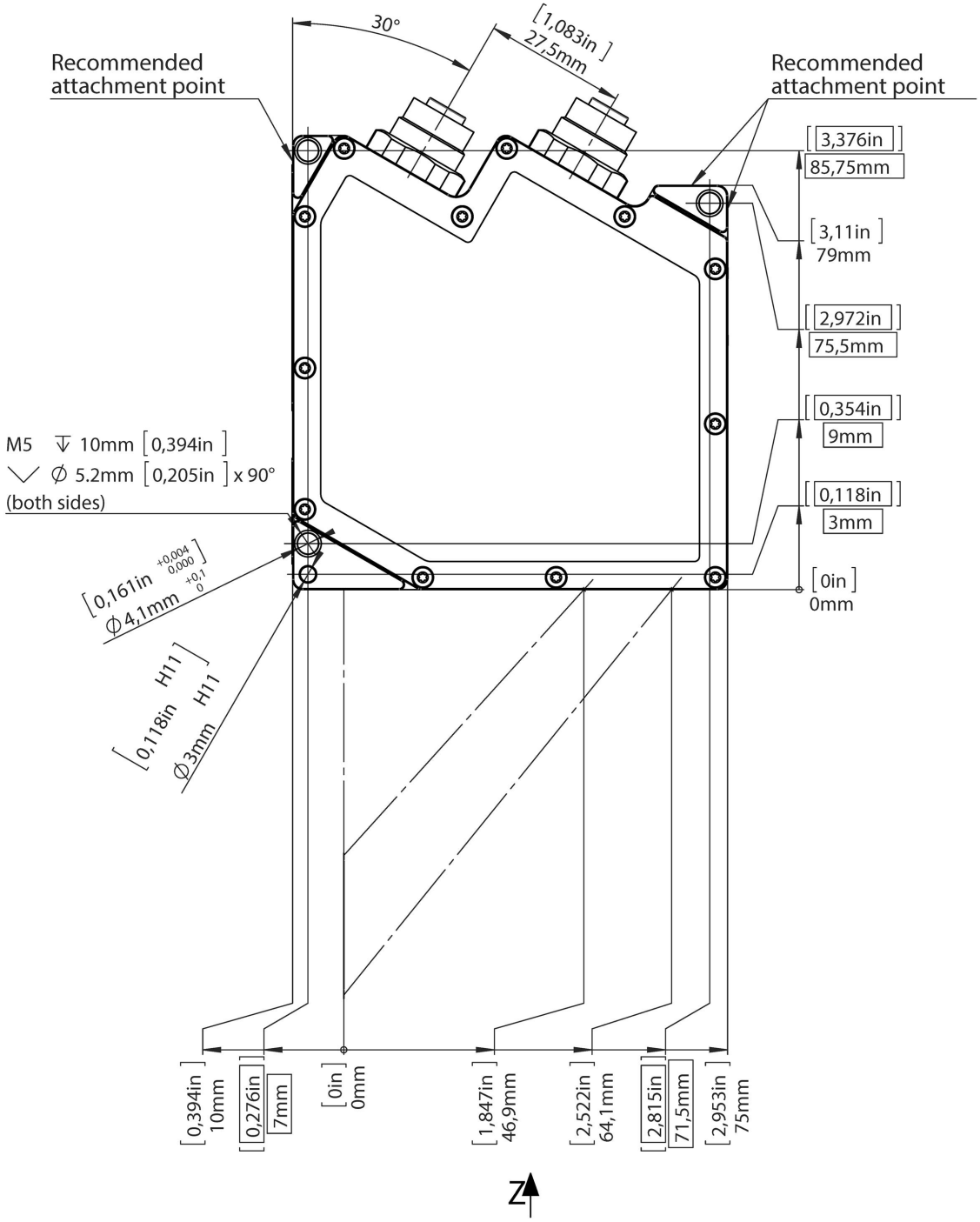

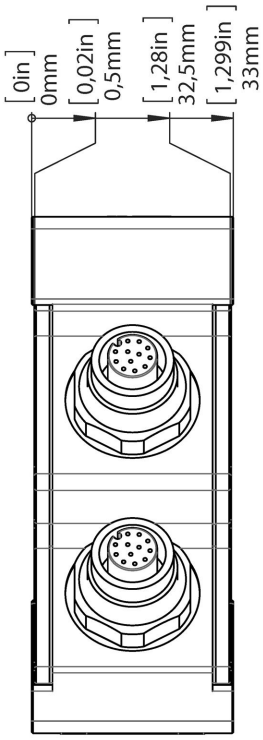
[0in]
0mm
[0,02in]
0,5mm
[1,28in]
32,5mm
[1,299in]
33mm

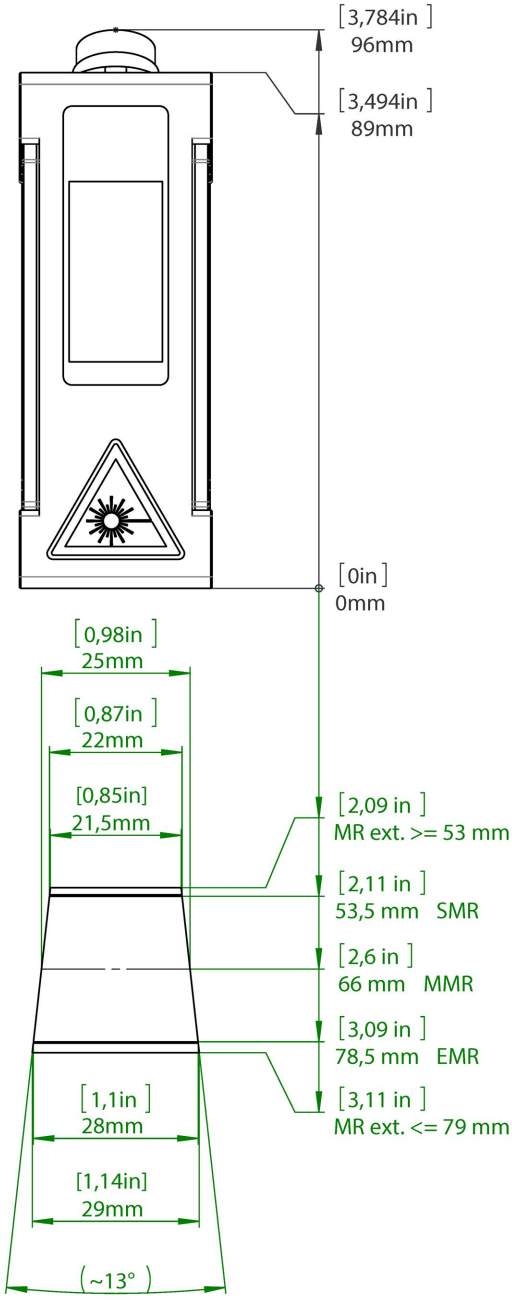
[3,784in]
96mm
[3,494in]
89mm
[0in]
0mm
[0,98in]
25mm
[0,87in]
22mm
[0,85in]
21,5mm
[2,09 in]
MR ext. >= 53 mm
[2,11 in]
53,5 mm SMR
[2,6 in]
66 mm MMR
[3,09 in]
78,5 mm EMR
[3,11 in]
MR ext. <= 79 mm
[1,1in]
28mm
[1,14in]
29mm
(~13°)

Installation Instructions

Note:

- Only Cognex-approved shielded cables should be used. See *Accessories* on page 8 for cable part numbers.
- Cable shields should be connected to the machinery's potential equalization terminals in order to avoid electrical current ground loops.
- Cables should be routed in accordance with standard electrical wiring procedures in order to minimize electrical noise.
- The minimum bend radius of the cables is 80mm.
- Cognex recommends the use of a separate power supply, either:
  - ACC-24I (DIN rail mountable, input 230VAC, output 24VDC/2A).
  - ACC-QUINT-PS (DIN rail mountable, input 230VAC, output 24VDC/5A).

1. Mount the sensor according to the mounting instructions, see *Mounting the DS900 Series Sensor* on page 20.
2. Install the Ethernet interface hardware, if not already installed.
3. Install VisionPro software according to the instructions of the VisionPro documentation.
4. Make sure that your license is installed and valid.
5. Connect the DS900 Series Sensor to the PC via Ethernet.
6. Switch on the power supply (only applicable if not using PoE for power).
7. Open the Cognex GigE Vision Configurator PC application.
8. Check that the device is recognized by the PC. This may take a few seconds.

The "state" LED indicates different error conditions by flashing. If several errors occur at the same time, it indicates two of them alternately. Therefore the LED can continue to flash for some time after the rectification of an error. If no flashing occurs for several seconds, no error has occurred. For the error codes, see *Error Codes* on page 39.

Note: A DS900 series sensor achieves highest precision measurements after it has been turned on for at least 20 minutes.

DRAFT

Mounting the DS900 Series Sensor

Firmly mount the sensor so that the laser is perpendicular to the motion of travel. The accuracy and reliability of your 3D images relies on the three-dimensional coordinate system defined by the position of the sensor and the movement of objects that pass within its view.

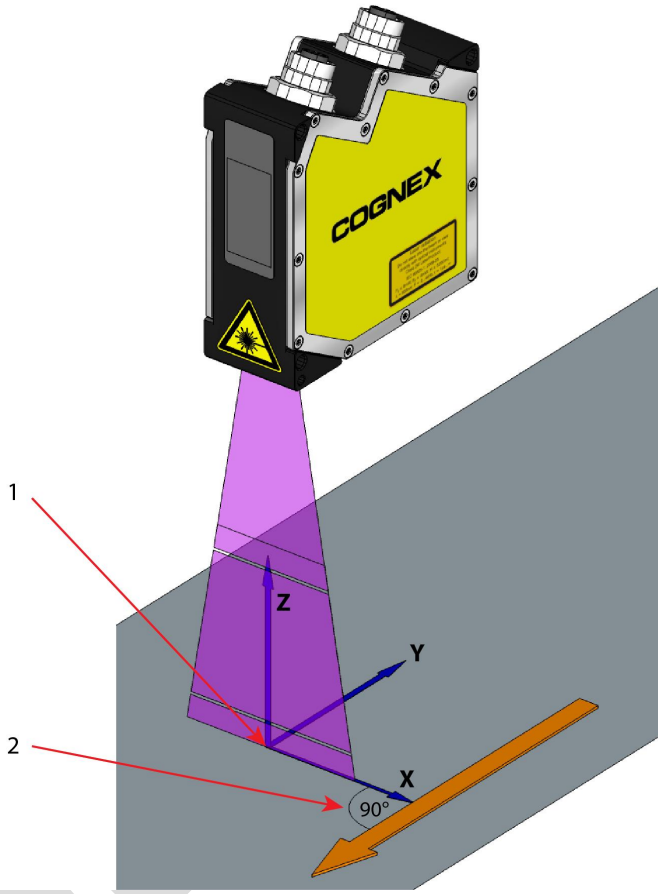

	Description
1	The origin of the X axis is the optical centerline of the sensor projected onto the Working Section.
2	For best results, movement should be perpendicular to the laser plane.

The device has three (3) threaded M5 holes and can be mounted using 2 or 3 of these holes, either as direct attachment points using M5 screws, or as through-holes accommodating M4 screws. One of the mounting holes is a 3mm diameter reference pin hole, provided to ensure accurate location of the unit during initial mounting or replacement. Refer to the drawings in *Dimensions (DS925B)* on page 17 for mounting dimensions and hole locations.

Note:

- See *Safely Handling* on page 6 for handling precautions that should be observed during mounting.
- The unit should be mounted such that the laser beam strikes the target surface at right angles. Misalignment of the unit can result in inaccurate measurements.

Power Supply

The sensor can be powered by either connecting to a PoE port, or using an external power supply via the multifunction port. The following information pertains to connecting power via the multifunction port. For a description and pin assignment, see *Multifunction Port* on page 24.

Note: If the sensor is connected to a network adapter/switch that is capable of PoE and if you also use the power supply of the multifunction port, these two power supplies have to be galvanically isolated.

CAUTION: Connect the multifunction port only when the power supply is switched off.

- The shielded Multifunction cable (CCB-2901868-05) is recommended. It uses an M12-12 connector with male pins, providing access to inputs.
- Range: 11 VDC – 30 VDC (rated value 24 VDC); maximum 500 mA. The operating voltage is protected against reverse polarity.
- The operating voltage for the DS900 series sensor should come from a 24 VDC power supply that is only used for measuring equipment and not simultaneously for drives, contactors or similar pulse interference sources. Use a power supply with galvanic isolation.

DRAFT

Ethernet Connection

For Ethernet connections, the 3D sensor supports an M12-8 connector with female pins:

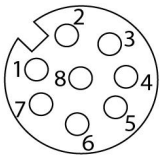

The Ethernet cable uses an RJ45 connector and an M12-8 connector with male pins:

RJ45 Connector		8-pin screw connector (sensor side)		
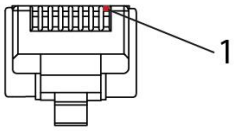		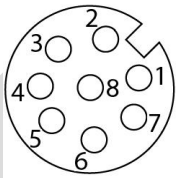		
Pin No.	Color stranded hook-up wire	Pin no.	10BaseT, 100BaseTX	1000BaseT
1	white / orange	5	Tx+	D1+
2	orange	6	Tx-	D1-
3	white / green	8	Rx+	D2+
4	blue	1		D3+
5	white / blue	2		D3-
6	green	7	Rx-	D2-
7	white / brown	3		D4+
8	brown	4		D4-

Cognex recommends the Gigabit-Ethernet connection cable CCB-2901858-05 for the Ethernet connection (5m). Characteristics: 4 x 2 x 0.4 mm²; shielded.

Note: Not compatible with the one used by DS1000 series sensors.

Cognex recommends you connect the DS unit directly to a 1 Gigabit network port or to a high-quality switch. Your PC should have one or more network cards dedicated only for the 3D sensors.

Operating the sensor via Ethernet does not require any driver installation provided the network settings are correct:

- If more than one network card is used, they must be placed on different subnets.
- Some network settings will affect the performance of the sensor (for example firewall and packet filter settings).
- Cognex recommends a packet size of 1024 bytes/packet. The sensor is capable of supporting jumbo frames up to 4096 bytes/packet, provided all network components also support jumbo frames.

Network-related sensor features:

- The sensor supports DHCP by default. If the sensor is unable to obtain a network address via DHCP, the sensor will use link-local addressing (169.254.x.x). Be aware that IP address conflict detection is not implemented.

DRAFT

- The sensor supports Power over Ethernet (PoE).
- The sensor can be configured with a fixed (static) IP address using the Cognex GigE Vision Configurator application.

DRAFT

Multifunction Port

The following information pertains to connecting power via the multifunction port, an M12-12 port with female pins.

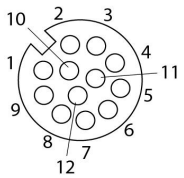

The shielded Multifunction cable (CCB-2901868-05) is recommended. It uses an M12-12 connector with male pins, providing access to inputs.

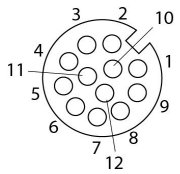		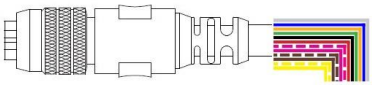	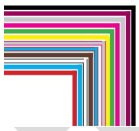
Pin #	**Signal Name**	**Notes**	**Wire Color**
9	PWR	+ 11 VDC - 30V DC (rated value 24 V); max. 500 mA[1]	Red
2	GND	0 V	Blue
3	+Laser on/off	Optional	White
1	-Laser on/off		Brown
6	In1	Digital Input 1	Yellow
4	GND-In1	Ground In1	Green
5	In2	Digital Input 2	Pink
8	GND-In2	Ground In2	Gray
10	In3	Digital Input 3	Purple
7	GND-In3	Ground In3	Black

- **PWR, GND**: galvanically isolated from In1, In2, In3, and Laser on/off
- **Laser on/off**: Input galvanically isolated from GND, In1, In2, In3
- **In1, In2, In3**: Inputs galvanically isolated from GND and Laser on/off
- GND-In1, GND-In2, GND-In3 - IO ground references for In1, In2, In3. Galvanically isolated from GND.

Note: If the sensor is connected to a network adapter/switch that is capable of PoE and if you also use the power supply of the multifunction port, these two power supplies have to be galvanically isolated.

[1] The operating voltage is protected against reverse polarity.

DRAFT

RS422

The RS422 connection (Pin 11 and 12 of the multifunction port) can be used to load user modes and sensor control (half-duplex RS422).

Signal Levels

The switching inputs of the multifunction port can be used for encoder input or for loading previously stored user modes. The signal levels are switchable for all switching inputs together via software between LLL (low-voltage-, TTL logic) and HLL (high-voltage-, HTL logic).

- LLL level: Low 0 V… 0.8 V, High 2.4 V… 5 V, internal pull-up 10 kOhm to 5 V
- HLL level: Low 0 V… 3 V, High 11 V… 24 V (permitted up to 30 V), internal pull-up 10 kOhm to 24
- Pulse duration: ≥ 5 µs

DRAFT

Switching Inputs

The switching inputs **In1** up to **In3** can be used for connecting an encoder. All switching inputs are identical. The circuits have internal electrical isolation. The inputs are galvanically isolated from the GND and Laser on/off. Each switching input has its own ground connection (GND-In1 to 3), which has to be connected with the external ground.

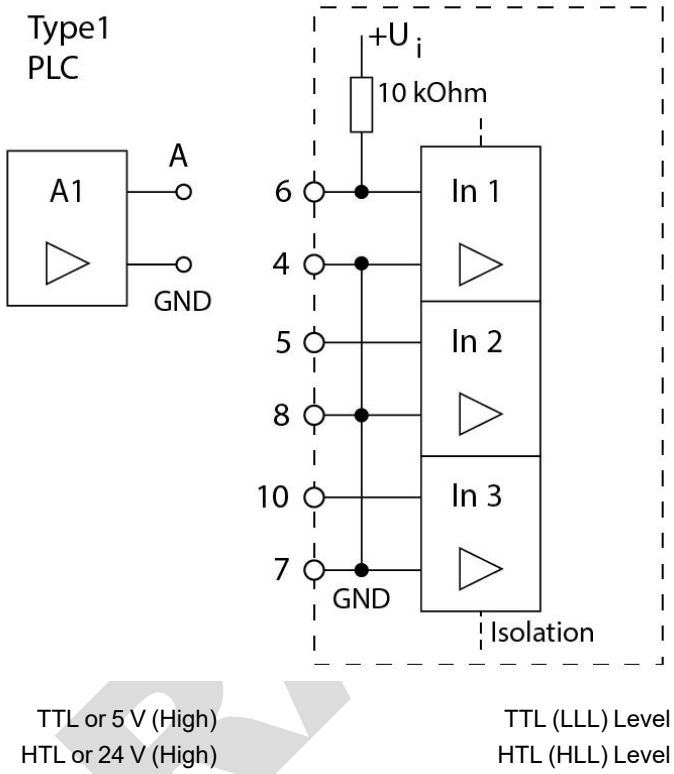

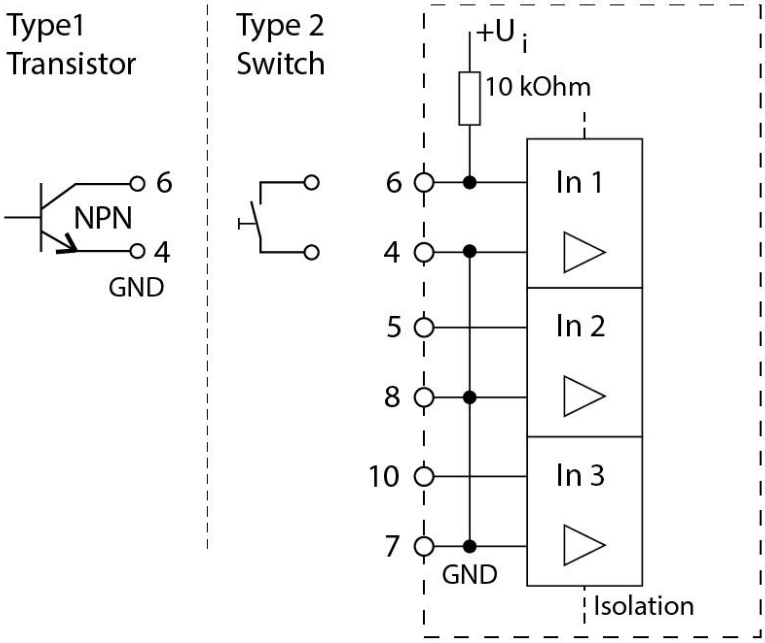

TTL (LLL) Level

The multifunction port can be used with any of the following configurations:

	Configuration	In1	In2	In3
0	Encoder with index, positive edge works with the index[1]	N	A	B
1	Encoder without index[2]	N	A	B
4	Load up to 8 user modes	Mode Bit 0	Mode Bit 1	Mode Bit 2
5	Transmit in time stamp	Bit 0	Bit 1	Bit 2

Note:

- Use a shielded cable with twisted wires.The shielded Multifunction cable (CCB-2901868-05) is recommended. It uses an M12-12 connector with male pins, providing access to inputs.
- If the sensor is connected to a network adapter/switch that is capable of PoE and if you also use the power supply of the multifunction port, these two power supplies have to be galvanically isolated.

DRAFT

[1] The encoder input counts each edge. Quadrature encoders typically output 4 edges per encoder step.

[2] The encoder input counts each edge. Quadrature encoders typically output 4 edges per encoder step.

RS422, Synchronization

Note: The DS900 series sensor supports Power over Ethernet. If the sensor is connected to a network adapter/switch that is capable of PoE and if you also use the power supply of the multifunction port, these two power supplies have to be galvanically isolated.

- For the multifunction socket and the pin assignment, see *Multifunction Port* on page 24.
- The DS900 series sensor has an RS422 port according to EIA standards, which can be parameterized as input or output via software.
- The internal terminating resistor (termination R_T = 120 Ohm, see the following diagram) can be activated or switched off via software. The signals must be operated symmetrically according to the RS422 standard.
- The RS422 port is galvanically isolated from GND and Laser on/off, but not from GND-In1 ... 3. When used, one of the GND-In1 ... 3 should be connected to the GND of the remote station in order to avoid potential differences.

The multifunction socket can be used with either of the following configurations:

	Configuration	Direction	Standard setting for terminating resistor R_T
0	Half-duplex, serial communication with 115200 Baud	input/output	On
1	Half-duplex, serial communication with 57600 Baud	input/output	
2	Half-duplex, serial communication with 38400 Baud	input/output	
3	Half-duplex, serial communication with 19200 Baud	input/output	
4	Half-duplex, serial communication with 9600 Baud	input/output	

Synchronizing several sensors with each other:

1. Connect the output RS422+ (Pin 12) of sensor 1 with the input RS422+ (Pin 12) of sensor 2.
2. Connect the output RS422- (Pin 11) of sensor 1 with the input RS422- (Pin 11) of sensor 2.
3. Also connect both the GND-In1 - pins (Pin 4) of the sensors to each other.

Software settings:

Setting	Sensor 1	Sensor 2	Sensor 3
No RS422 termination	No (terminating resistor not active)	Yes (terminating resistor not active)	No (terminating resistor active)

Sensor 1 then synchronizes the sensor 2 and further sensors as master.

DRAFT

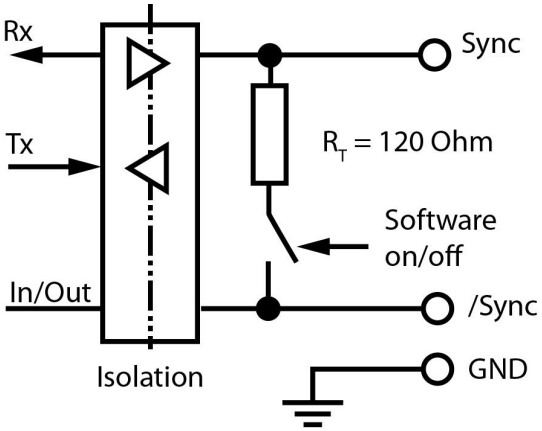
Rx
Tx
In/Out
Isolation
Sync
R_T = 120 Ohm
Software
on/off
/Sync
GND

DRAFT

Measuring Field Selection

The usable measuring range is always trapezoidal. The assigned maximum x-values for the z-coordinates can be found in *Dimensions (DS925B)* on page 17. The top edge corresponds to the start of the measuring range and the bottom edge to the end of the measuring range. The corners of the predefined measuring fields are on a grid with grid spacing of 1/8 of the matrix. The sensor matrix used in the DS900 Series Sensor supports the reading of a restricted measuring field.

The following picture shows the predefined view areas and the associated measuring fields.

DRAFT

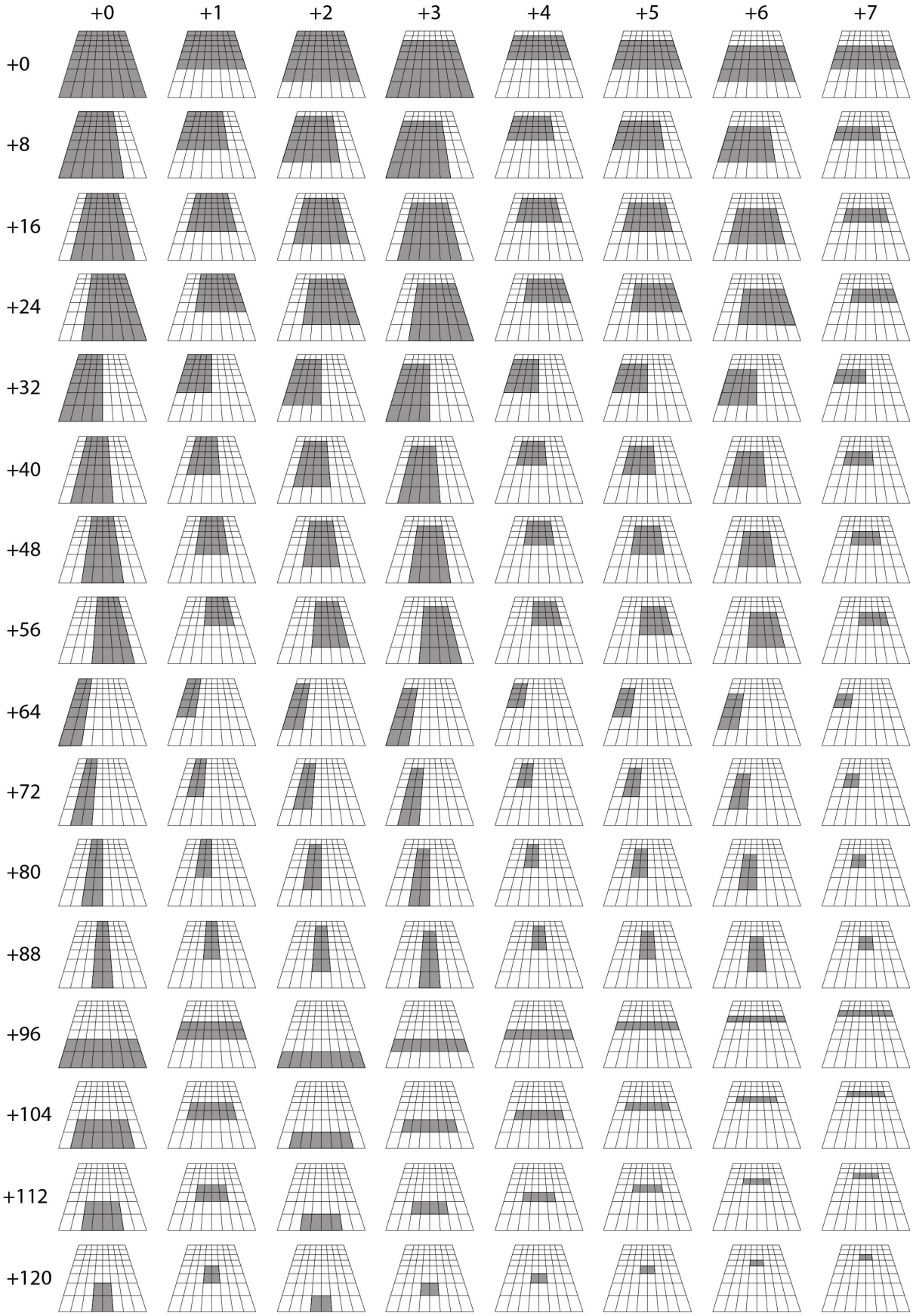
+0
+1
+2
+3
+4
+5
+6
+7
+0
+8
+16
+24
+32
+40
+48
+56
+64
+72
+80
+88
+96
+104
+112
+120

Maximum Scan Rates for Measuring Fields

Maximum Acquiring Rate Depending on the Measuring Field Number								
	+0	**+1**	**+2**	**+3**	**+4**	**+5**	**+6**	**+7**
0	144Hz	192Hz	192Hz	192Hz	284Hz	284Hz	284Hz	552Hz
8	181Hz	239Hz	239Hz	239Hz	354Hz	354Hz	354Hz	680Hz
16	181Hz	239Hz	239Hz	239Hz	354Hz	354Hz	354Hz	680Hz
24	181Hz	239Hz	239Hz	239Hz	354Hz	354Hz	354Hz	680Hz
32	241Hz	318Hz	318Hz	318Hz	469Hz	469Hz	469Hz	892Hz
40	241Hz	318Hz	318Hz	318Hz	469Hz	469Hz	469Hz	892Hz
48	241Hz	318Hz	318Hz	318Hz	469Hz	469Hz	469Hz	892Hz
56	241Hz	318Hz	318Hz	318Hz	469Hz	469Hz	469Hz	892Hz
64	362Hz	476Hz	476Hz	476Hz	694Hz	694Hz	694Hz	1200Hz
72	362Hz	476Hz	476Hz	476Hz	694Hz	694Hz	694Hz	1200Hz
80	362Hz	476Hz	476Hz	476Hz	694Hz	694Hz	694Hz	1200Hz
88	362Hz	476Hz	476Hz	476Hz	694Hz	694Hz	694Hz	1200Hz
96	552Hz	552Hz	690Hz	690Hz	1020Hz	900Hz	900Hz	1030Hz
104	680Hz	680Hz	760Hz	760Hz	960Hz	1020Hz	960Hz	1020Hz
112	892Hz	892Hz	860Hz	860Hz	1020Hz	1020Hz	1020Hz	1020Hz
120	1020Hz	1200Hz	1020Hz	1020Hz	1200Hz	1200Hz	1200Hz	1200Hz

Recommended Shutter Times

The value of **exposure** (in milliseconds) should be set depending on the material that is being scanned. The recommendations are as follows:

Recommended shutter times (approximate values)	
Target material	**Shutter Time**
White paper/plastic	10 - 50µs
Colored plastic	50 - 100µs
Metallic surfaces	0.1 - 1ms
Black plastic/rubber	0.5 - 1ms

The measuring field can be restricted by omitting complete matrix areas in order to suppress interfering image ranges. **Measuring field** and **measuring range** must be clearly differentiated in practical use. The measuring field is related to the matrix and the measuring range is related to the measuring object (the object space). Both do not have to match on account of the optical mapping and the definitions. The measuring field “standard” is larger than the measuring range “standard”.

The DS900 Series Sensors are distinguished by:

- A laser line with 20° opening angle (measuring range 25 mm) respectively 25° opening angle (measuring ranges 50 mm and 100 mm).
- The receiver has a smaller opening angle (view angle) than the laser line.
- Centered measuring field (symmetrical to the center axis).

DRAFT

- The high resolution sensor image matrix has 1280 x 1024 pixels. The measuring field geometry is fixed.
- Reference for the distance (Z-axis) is the lowest body edge of the sensor, see the dimensional drawings (see *Dimensions (DS925B)* on page 17).
- Use of the GigE-Vision standard.
- Standard GigE Vision implementation from different manufacturers can be used.

DRAFT

DS910B – Measurement Specifications

Specification	DS910B
Near Field of View	9.4 mm
Far Field of View	10.7 mm
Clearance Distance (CD)	53 mm
Measurement Range (MR)	8 mm
Resolution X	0.0073 mm - 0.0084 mm
Resolution Z	0.001 mm

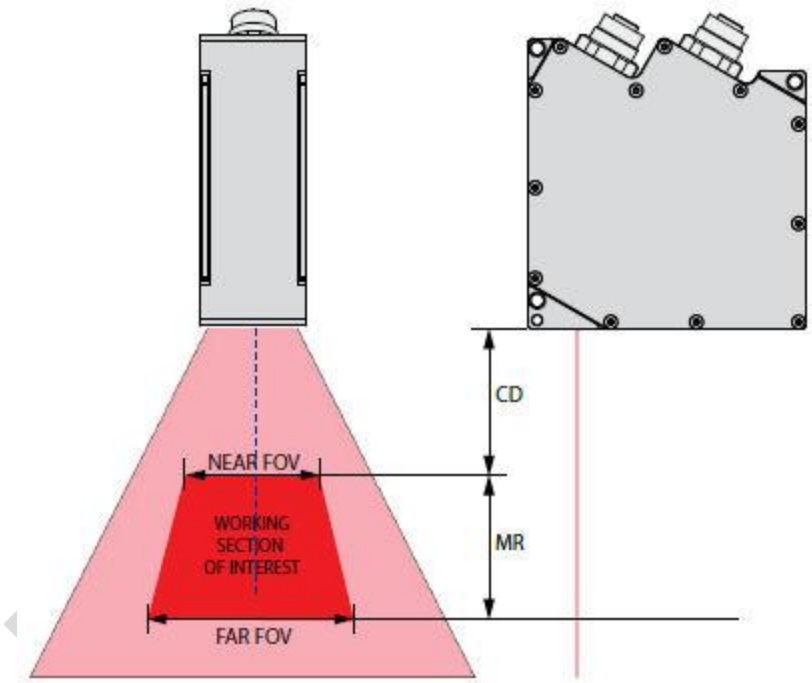

DS925B – Measurement Specifications

Specification	DS925B
Near Field of View	23.4 mm
Far Field of View	29.1 mm
Clearance Distance (CD)	53.5 mm
Measurement Range (MR)	25 mm
Resolution X	0.0183 mm - 0.0227 mm
Resolution Z	0.002 mm

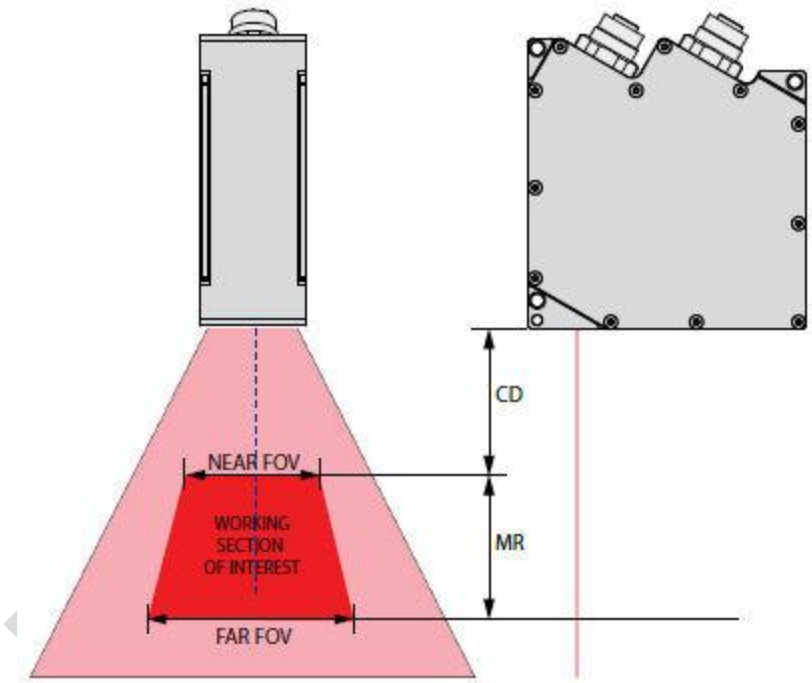

Error Influences

- **Reflection of the Target Surface**

  The sensor evaluates the diffuse light returned from the laser line projection. Note that it is not possible to identify a specific minim reflectance factor in order for measurements to be successful. Testing is always required when using a sensor on transparent objects or highly mirrored surfaces. Direct reflection on such surfaces cannot be used for accurate measurements due to the fan-shaped form of the laser line projection.

- **Color Differences**

  Color differences of measurement objects have effects. However, these color differences are often also combined with different penetration depths of the laser light into the material. Different penetration depths in turn result in apparent changes of the line thickness. Therefore, color changes, combined with penetration depth changes, can result in inaccurate measurements.

  As the exposure parameters can only be changed as a whole for one profile, careful matching of the exposure to the target surface is recommended.

- **Temperature Influences**

  A running-in time of at least 20 minutes during start-up is required in order to achieve a uniform temperature spread in the sensor.

  If measurements with accuracy in the µm range are made, the effect of temperature fluctuations on the mounting must also be observed by the user.

  Due to the damping effect of the thermal capacity of the sensor, fast temperature changes are only measured after a delay.

- **External Light**

  An interference filter in the sensor is present for suppression of external light.

  In general, the shielding of external light directly emitted on the target or reflected in the sensor must be ensured using protective covers or similar.

  Pay particular attention to unwanted reflections of the laser line outside the measuring object range (background, object holder or similar) which can be reflected back again into the view area of the receiver.

  Matte black surface coatings are recommended for all objects outside the measuring range (object holders, transport apparatus or similar) which can be reflected back again into the view area of the receiver.

- **Mechanical Vibrations**

  If you want to achieve high resolutions in the µm range with the sensor, pay particular attention to stable or vibration-damped sensor and measuring object mounting.

- **Surface Roughness**

  Surface roughness of 5 µm and more results in "surface noises" due to interference of the laser light.

  Direct reflections of the laser light into the receiver can also occur due to fine surface grooves (e.g. abrasion marks), particularly if these run parallel to the laser line. This can result in inaccurate measurements.

  Prevention of this effect might be possible by adjusting several sensor settings e.g. exposure time, filter.

- **Shadowing Effects**

  - Receiver: The laser line can disappear completely or partially behind steep edges. The receiver then can not "see" these areas.

DRAFT

- Laser Line: The fan-shaped form of the laser line inevitably results in parallel shadowing at vertical edges. In order to make these areas visible, only changing the sensor of the object position helps.

As a general rule, measuring objects with steep edges cannot be one hundred percent measured using laser triangulation. The missing areas can only be supplemented or interpolated using suitable software.

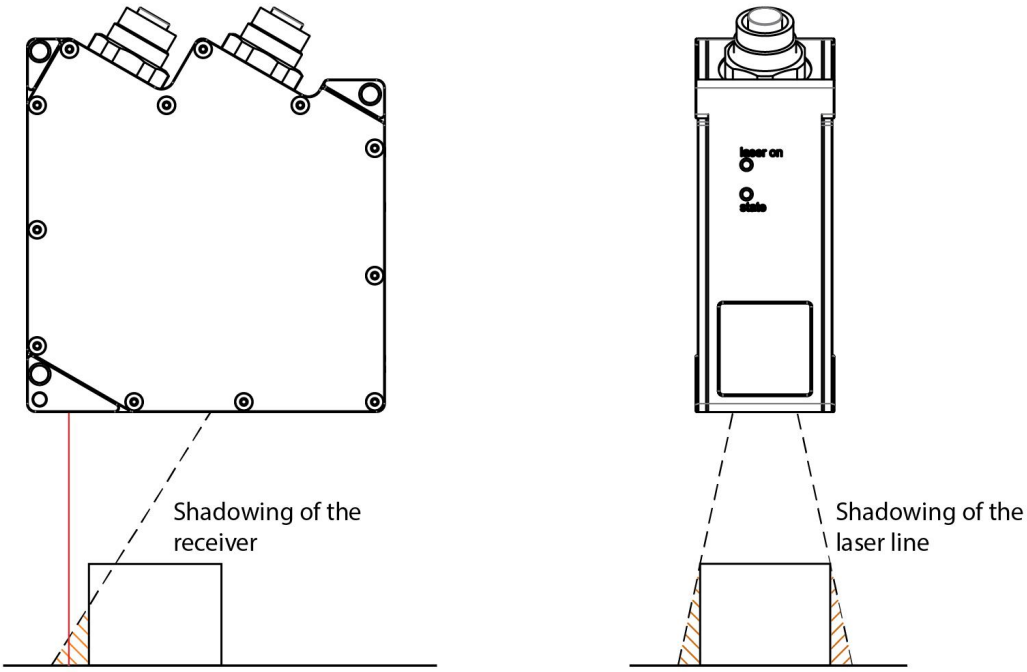

DRA

DS900 Series Sensor Accuracy

- Measurement accuracy varies depending on how accurately the unit is mounted and on the surface characteristics of the object being measured; it is not possible to specify a guaranteed accuracy value.
- In general, sensor accuracy is improved when:
    - Relative measurements are made within a single scene (what is the difference between surface A and surface B) are more accurate than absolute measurements (how far is surface B from the sensor).
    - The sensor is rigidly mounted using the high-accuracy mounting hole.
    - The sensor is precisely perpendicular to the surface being measured.
- In general, sensor accuracy is the best at the optical axis.
- In general, sensor range measurements are extremely repeatable, however the accuracy is dependent on how well the exposure is set.

DRAFT

Error Codes

- indicates that the “state” LED lights for a longer time.

. indicates that the “state” LED lights briefly.

Flashing sequence	Cause	Remedy	Notes
Group: Loading / saving configuration			
.. 2x short	Mode not found.	Select different one.	Only previously stored modes can be called up.
..- 2x short, 1x long	White error flash.	Contact manufacturer, return sensor.	Should not occur in normal operation.
... 3x short	Flash full.	None, contact manufacturer.	Should not occur in normal operation.
.... 4x short	Loading suppressed due to active data transmission.	Stop active data transmission.	Prevents PC software crashes.
--... 2x long, 3x short	Data overflow during transmission of the data via Ethernet.	Reduce profile frequency, increase packet size.	Data can be impaired.
--..... 2x long, 5x short	Error during calculation.	Reduce profile frequency, select faster calculation mode.	Data can be impaired.
--..... 2x long, 6x short	Error during Ethernet transmission.	Reduce profile frequency.	Data can be impaired.
Group: Data processing and transmission			
-- 2x long	Data overflow in the sensor.	Select smaller measuring field, reduce profile frequency, select less complex measuring program.	Data can be impaired; exposure time can be longer than expected.
--. 2x long, 1x short	Data overflow during receipt of the data from the sensor.	Select smaller measuring field, reduce profile frequency, select less complex measuring program.	Data can be impaired.
--.. 2x long, 2x short	Data overflow for serial port RS422.	Reduce profile frequency, select less complex measuring program.	Data can be impaired.
Group: Ethernet Interface			
---- 4x long	IP Address conflict.	Check the Ethernet configuration of device and the host PC. Choose another IP address for the device.	If the problem persists, please contact the manufacturer.

- The "state" LED flashes green and **long** during active data transmission.
- The "state" LED flashes green and **short** for controller accesses. A controller access can cause various data overflows particularly if the measuring frequency is near its maximum.

DRAFT

Compliance Statements

DS900 series sensors meet or exceed the requirements of all applicable standards organizations for safe operation. As with any electrical equipment, however, the best way to ensure safe operation is to operate them according to the agency guidelines that follow. Please read these guidelines carefully before using your device.

Regulator	Specification
USA	CFR 47 FCC Part 15 (b) Class A FDA/CDRH Laser Notice No. 50
Canada	ICES-003 Issue 4 Class A
European Community	EN 55022:2006/A1:2007 Class A EN 61000-6-2:2005
Australia	C-TICK, AS/NZS CISPR 22 / EN 55022 for Class A Equipment
Japan	J55022, Class A

Safety and Regulatory

CE	Regulatory Model 1AA2
FC	This equipment has been tested and found to comply with the limits for a Class A digital device, pursuant to Part 15 of the FCC rules. These limits are designed to provide reasonable protection against harmful interference when the equipment is operated in a commercial environment. This equipment generates, uses, and can radiate radio frequency energy and, if not installed and used in accordance with the instructions, may cause harmful interference to radio communications. Operation of this equipment in a residential area is likely to cause harmful interference, in which case the user will be required to correct the interference at personal expense.

For European Community Users

Cognex complies with Directive 2012/19/EU OF THE EUROPEAN PARLIAMENT AND OF THE COUNCIL of 4 July 2012 on waste electrical and electronic equipment (WEEE).

This product has required the extraction and use of natural resources for its production. It may contain hazardous substances that could impact health and the environment, if not properly disposed.

In order to avoid the dissemination of those substances in our environment and to diminish the pressure on the natural resources, we encourage you to use the appropriate take-back systems for product disposal. Those systems will reuse or recycle most of the materials of the product you are disposing in a sound way.

The crossed out wheeled bin symbol informs you that the product should not be disposed of along with municipal waste and invites you to use the appropriate separate take-back systems for product disposal.

If you need more information on the collection, reuse, and recycling systems, please contact your local or regional waste administration.

You may also contact your supplier for more information on the environmental performance of this product.

DRAFT

Laser Safety Statement

Compliance with FDA performance standards for laser products except for deviations pursuant to Laser Notice No. 50, dated June 24, 2007.

This device has been tested in accordance with IEC60825-1 2nd ed., and has been certified to be under the limits of a Class 2M Laser device.

Use of controls or adjustments or performance of procedures other than those specified herein may result in hazardous radiation exposure.

DRAFT

FOR INTERNAL USE

January 2018