COGNEX

In-Sight® 5000 Series Vision System

Reference Guide

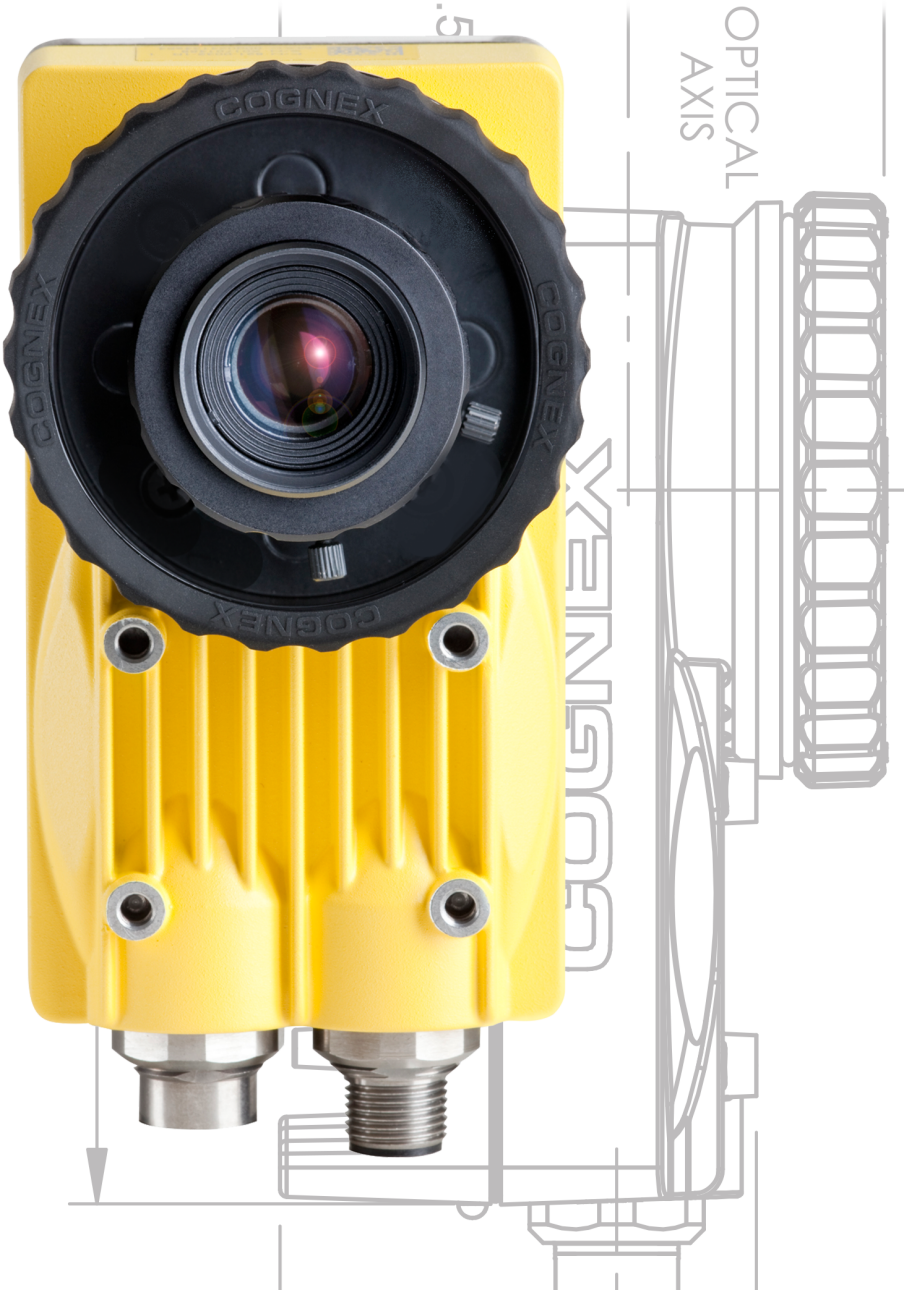

2024 October 10
Revision: 6.5.1.3

Legal Notices

The software described in this document is furnished under license, and may be used or copied only in accordance with the terms of such license and with the inclusion of the copyright notice shown on this page. Neither the software, this document, nor any copies thereof may be provided to, or otherwise made available to, anyone other than the licensee. Title to, and ownership of, this software remains with Cognex Corporation or its licensor. Cognex Corporation assumes no responsibility for the use or reliability of its software on equipment that is not supplied by Cognex Corporation. Cognex Corporation makes no warranties, either express or implied, regarding the described software, its merchantability, non-infringement or its fitness for any particular purpose.

The information in this document is subject to change without notice and should not be construed as a commitment by Cognex Corporation. Cognex Corporation is not responsible for any errors that may be present in either this document or the associated software.

Companies, names, and data used in examples herein are fictitious unless otherwise noted. No part of this document may be reproduced or transmitted in any form or by any means, electronic or mechanical, for any purpose, nor transferred to any other media or language without the written permission of Cognex Corporation.

Copyright © 2003 - 2020. Cognex Corporation. All Rights Reserved.

Portions of the hardware and software provided by Cognex may be covered by one or more U.S. and foreign patents, as well as pending U.S. and foreign patents listed on the Cognex web site at: cognex.com/patents.

The following are registered trademarks of Cognex Corporation:

Cognex, 2DMAX, Advantage, AlignPlus, Assemblyplus, Check it with Checker, Checker, Cognex Vision for Industry, Cognex VSOC, CVL, DataMan, DisplayInspect, DVT, EasyBuilder, Hotbars, IDMax, In-Sight, Laser Killer, MVS-8000, OmniView, PatFind, PatFlex, PatInspect, PatMax, PatQuick, SensorView, SmartView, SmartAdvisor, SmartLearn, UltraLight, Vision Solutions, VisionPro, VisionView

The following are trademarks of Cognex Corporation:

The Cognex logo, 1DMax, 3D-Locate, 3DMax, BGAII, CheckPoint, Cognex VSoC, CVC-1000, FFD, iLearn, In-Sight (design insignia with cross-hairs), In-Sight 2000, InspectEdge, Inspection Designer, MVS, NotchMax, OCRMax, PatMax RedLine, ProofRead, SmartSync, ProfilePlus, SmartDisplay, SmartSystem, SMD4, VisiFlex, Xpand

Portions copyright © Microsoft Corporation. All rights reserved.

Portions copyright © MadCap Software, Inc. All rights reserved.

Other product and company trademarks identified herein are the trademarks of their respective owners.

Regulations/Conformity

Note: For the most current CE and UKCA declaration and regulatory conformity information, see the Cognex support site: cognex.com/support.

Safety and Regulatory	
Manufacturer	Cognex Corporation One Vision Drive Natick, MA 01760 USA
CE	In-Sight 5100/5110/5400/5410: Type 821-0034-1R In-Sight 5100C/5400C: Type 821-0036-1R In-Sight 5403/5413: Type 821-0037-1R This is a class A product. In a domestic environment this product may cause radio interference in which case the user may be required to take immediate measures. This equipment complies with the essential requirements of the EU Directive 2014/30/EU. Declarations are available from your local representative.
EU RoHS	Compliant to the most recent applicable directive.
FCC	FCC Part 15, Class A This equipment has been tested and found to comply with the limits for a Class A digital device, pursuant to part 15 of the FCC Rules. These limits are designed to provide reasonable protection against harmful interference when the equipment is operated in a commercial environment. This equipment generates, uses, and can radiate radio frequency energy and, if not installed and used in accordance with the instruction manual, may cause harmful interference to radio communications. Operation of this equipment in a residential area is likely to cause harmful interference in which case the user will be required to correct the interference at his own expense.
Korea	In-Sight 5100/5110/5400/5410: CGX-IS5400-01(A) In-Sight 5100C/5400C: CGX-IS5400-C01(A) In-Sight 5403/5413: CGX-IS5403-01(A) This device is certified for office use only and if used at home, there can be frequency interference problems.
TÜV	In-Sight 5100/5110/5400/5410: Type 821-0034-1R In-Sight 5100C/5400C: Type 821-0036-1R In-Sight 5403/5413: Type 821-0037-1R
	NRTL: TÜV SÜD AM SCC/NRTL OSHA Scheme for UL/CAN 60950-1.
	CB report available upon request. TÜV SÜD AM, IEC/EN 60950-1.

Safety and Regulatory	
Manufacturer	Cognex Corporation One Vision Drive Natick, MA 01760 USA
CE	In-Sight 5600/5610: Type 821-0041-1R In-Sight 5603/5613: Type 821-0042-1R In-Sight 5604/5614: Type 821-0051-1R In-Sight 5605/5615: Type 821-0032-1R; Type 821-0032-2R In-Sight 5705/5715/5705C: Regulatory Model 1AAF This is a class A product. In a domestic environment this product may cause radio interference in which case the user may be required to take immediate measures. This equipment complies with the essential requirements of the EU Directive 2014/30/EU. Declarations are available from your local representative.
EU RoHS	Compliant to the most recent applicable directive.
FCC	FCC Part 15, Class A This equipment has been tested and found to comply with the limits for a Class A digital device, pursuant to part 15 of the FCC Rules. These limits are designed to provide reasonable protection against harmful interference when the equipment is operated in a commercial environment. This equipment generates, uses, and can radiate radio frequency energy and, if not installed and used in accordance with the instruction manual, may cause harmful interference to radio communications. Operation of this equipment in a residential area is likely to cause harmful interference in which case the user will be required to correct the interference at his own expense.
Korea	In-Sight 5600/5610: KCC-REM-CGX-IS5600-01 In-Sight 5603/5613: KCC-REM-CGX-IS5603-01 In-Sight 5604/5614: KCC-REM-CGX-IS5604-01 In-Sight 5605/5615: CGX-IS5605-01(A) In-Sight 5705/5715/5705C: Regulatory Model 1AAF: MSIP-REM-CGX-1AAF This device is certified for office use only and if used at home, there can be frequency interference problems.
TÜV	In-Sight 5600/5610: Type 821-0041-1R In-Sight 5603/5613: Type 821-0042-1R In-Sight 5604/5614: Type 821-0051-1R In-Sight 5605/5615: Type 821-0032-1R; Type 821-0032-2R In-Sight 5705/5715/5705C: Regulatory Model 1AAF
	NRTL: TÜV SÜD SCC/NRTL OSHA Scheme for UL/CAN 61010-1.
	CB report available upon request. TÜV SÜD, IEC/EN 61010-1.

For European Community Users

Cognex complies with Directive 2012/19/EU OF THE EUROPEAN PARLIAMENT AND OF THE COUNCIL of 4 July 2012 on waste electrical and electronic equipment (WEEE).

This product has required the extraction and use of natural resources for its production. It may contain hazardous substances that could impact health and the environment, if not properly disposed.

In order to avoid the dissemination of those substances in our environment and to diminish the pressure on the natural resources, we encourage you to use the appropriate take-back systems for product disposal. Those systems will reuse or recycle most of the materials of the product you are disposing in a sound way.

The crossed out wheeled bin symbol informs you that the product should not be disposed of along with municipal waste and invites you to use the appropriate separate take-back systems for product disposal.

If you need more information on the collection, reuse, and recycling systems, please contact your local or regional waste administration.

You may also contact your supplier for more information on the environmental performance of this product.

Precautions

To reduce the risk of injury or equipment damage, observe the following precautions when you install the Cognex product:

- In-Sight 5000 series vision systems are intended to be supplied by a UL or NRTL listed power supply with a 24VDC output rated for at least 600 mA continuous and a maximum short circuit current rating of less than 8A and a maximum power rating of less than 100VA and marked Class 2 or Limited Power Source (LPS). Any other voltage creates a risk of fire or shock and can damage the components. Applicable national and local wiring standards and rules must be followed.
- This product is intended for industrial use in automated manufacturing or similar applications.
- The safety of any system incorporating this product is the responsibility of the assembler of the system.
- Do not install Cognex products where they are exposed to environmental hazards such as excessive heat, dust, moisture, humidity, impact, vibration, corrosive substances, flammable substances, or static electricity.
- Route cables and wires away from high-current wiring or high-voltage power sources to reduce the risk of damage or malfunction from the following causes: over-voltage, line noise, electrostatic discharge (ESD), power surges, or other irregularities in the power supply.
- The housing of the vision system is internally connected to the system ground wire (pin 8 of the Breakout cable). Therefore, if the mounting surface of the vision system is at a non-zero ground potential, it is strongly recommended that the vision system be mounted on an isolated or non-conductive mount.
- Do not expose the image sensor to laser light. Image sensors can be damaged by direct, or reflected, laser light. If your application requires laser light that might strike the image sensor, use a lens filter at the corresponding laser wavelength. For suggestions, contact your local integrator or application engineer.
- This product does not contain user-serviceable parts. Do not make electrical or mechanical modifications to product components. Unauthorized modifications can void your warranty.
- The In-Sight vision system does not contain user-serviceable parts. Do not make electrical or mechanical modifications to In-Sight vision system components. Unauthorized modifications can void your warranty.
- Changes or modifications not expressly approved by the party responsible for regulatory compliance could void the user’s authority to operate the equipment.
- Include service loops with cable connections.
- Ensure that the cable bend radius begins at least six inches from the connector. Cable shielding can be degraded or cables can be damaged or wear out faster if a service loop or bend radius is tighter than 10X the cable diameter.
- This device should be used in accordance with the instructions in this manual.

Table of Contents

Legal Notices **2**

Regulations/Conformity **3**

For European Community Users 5

Precautions **6**

Table of Contents **7**

Introduction **9**

Support 9

Standard Components 9

Accessories 10

Cables 10

Ethernet Cable 10

Breakout Cable 11

I/O Module Cable 12

I/O Modules 12

Installation **14**

Connectors and Indicators 14

Install the Lens 15

Connect the Ethernet Cable 15

Connect the Breakout Cable 16

Specifications **17**

5100, 5100C, 5400C, 5403 and 5400 Vision System Specifications 17

5603, 5600 and 5605 Vision System Specifications 19

5604 Line Scan Vision System Specifications 21

5705 and 5705C Vision System Specifications 23

I/O Specifications 25

Acquisition Trigger Input 25

Encoder Inputs (In-Sight 5604 Only) 26

High-Speed Outputs 27

High-Speed Output - NPN Configuration 27

High-Speed Output - PNP Configuration 28

High-Speed Output - Relay/LED Configuration 28

5100 and 5400 Series Vision System Ethernet Cable Specifications 29

5600 and 5700 Series Vision System Ethernet Cable Specifications 30

Breakout Cable Specifications 31

I/O Module Cable Specifications 32

Dimensional Drawings 33

5100, 5100C, 5400, 5400C and 5403 Vision System (With Lens Cover) 33

5100, 5100C, 5400, 5400C and 5403 Vision System (Without Lens Cover) 34

5600 and 5603 Vision System (With Lens Cover) 35

5600 and 5603 Vision System (Without Lens Cover) 36

5604, 5605, 5705, and 5705C Vision System (With Lens Cover) 37

5604, 5605, 5705, and 5705C Vision System (Without Lens Cover) 38

Cleaning/Maintenance 39

Clean the Vision System Housing 39

Clean the Vision System Image Sensor Window 39

Clean the Vision System Lens Cover 39

Introduction

The In-Sight® vision system is a compact, network-ready, stand-alone machine vision system used for automated inspection, measurement, identification and robot guidance applications on the factory floor. All models can be easily configured remotely over a network using an intuitive user interface.

Support

Many information resources are available to help you use the vision system:

- The *In-Sight® Explorer Help* and *EasyBuilder Help* files, provided with In-Sight Explorer software.
- On-demand training: cognex.com/on-demand-training.aspx.
- The In-Sight online support site: cognex.com/support/insight.

Note: For the latest documentation, visit: support.cognex.com/documentation/in-sight.

Standard Components

The vision system is shipped with the standard components listed below.

Note: Cables are sold separately.

Component	In-Sight 5100/5110 In-Sight 5100C In-Sight 5400C In-Sight 5400/5410	In-Sight 5403/5413 In-Sight 5600/5610 In-Sight 5603/ 5613	In-Sight 5604/5614 In-Sight 5605/5615 In-Sight 5705/5715 In-Sight 5705C
50mm Lens Cover Kit (P/N 800-5842-xR)	X	X	
80mm Lens Cover Kit (P/N 823-0133-xR)			X
Thread Guard (P/N 370-0361)	X	X	X
Mounting Screw Kit (P/N 800-5843-xR)	X	X	X

Component	Description
Vision System	Provides image acquisition, vision processing, job storage, serial and Ethernet connectivity and discrete I/O.
Lens Cover Kit (includes lens cover and O-Ring)	Provides environmental protection for the lens.
Thread Guard	Protects the In-Sight vision system lens cover threads when the lens cover is not used. Remove the thread guard prior to installing the lens cover.
Mounting Screw Kit	Includes M4 screws for mounting the vision system (quantity 4).

Accessories

You can purchase the following components separately. For a list of options and accessories, contact your local Cognex sales representative.

Cables

Note: Cables are sold separately.

CAUTION: All cable connectors are keyed to fit the connectors on the vision system. Do not force the connections or damage may occur.

Ethernet Cable

The Ethernet cable is used to connect the vision system to other network devices. The pin-outs for the cable are listed in the *5100 and 5400 Series Vision System Ethernet Cable Specifications* on page 29 and *5600 and 5700 Series Vision System Ethernet Cable Specifications* on page 30. This cable is available in the lengths and styles listed below.

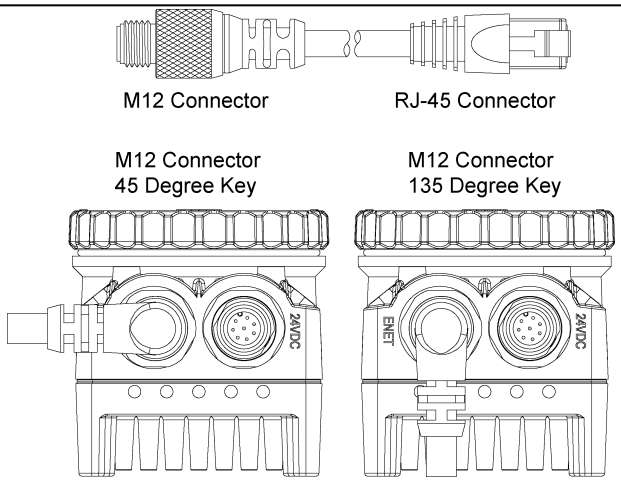

Length	Standard Part #	45-Degree Key Right-Angle Part #	135-Degree Key Right Angle Part #
0.6 m	CCB-84901-1001-00	N/A	N/A
2 m	CCB-84901-1002-02	CCB-84901-6005-02	CCB-84901-7005-02
5 m	CCB-84901-1003-05	CCB-84901-6001-05	CCB-84901-7001-05
10 m	CCB-84901-1004-10	CCB-84901-6002-10	CCB-84901-7002-10
15 m	CCB-84901-1005-15	CCB-84901-6003-15	CCB-84901-7003-15
30 m	CCB-84901-1006-30	CCB-84901-6004-30	CCB-84901-7004-30

Breakout Cable

The Breakout cable provides connection to an external power supply, RS-232 serial communications, acquisition trigger input, high-speed outputs and encoder inputs (In-Sight 5604 only). The pin-outs for the cable are listed in the *Breakout Cable Specifications* on page 31. This cable is available in the lengths listed below.

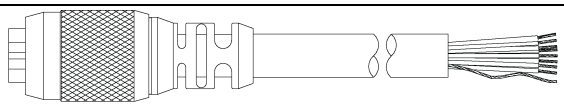

M12 Connector

M12 Connector
45 Degree Key

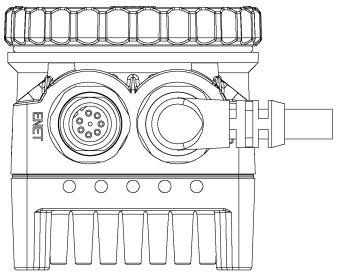

M12 Connector
135 Degree Key

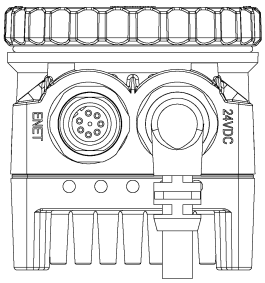

Length	Standard Part #	45-Degree Key Right-Angle Part #	135-Degree Key Right Angle Part #
2 m	CCB-84901-0101-02	CCB-84901-0401-02	CCB-84901-0501-02
5 m	CCB-84901-0102-05	CCB-84901-0402-05	CCB-84901-0502-05
10 m	CCB-84901-0103-10	CCB-84901-0403-10	CCB-84901-0503-10
15 m	CCB-84901-0104-15	CCB-84901-0404-15	CCB-84901-0504-15

I/O Module Cable

The I/O Module cable connects the vision system directly to a compatible In-Sight I/O module via the DB15 connector. The pin-outs for the cable are listed in the *I/O Module Cable Specifications* on page 32. This cable is available in the lengths listed below.

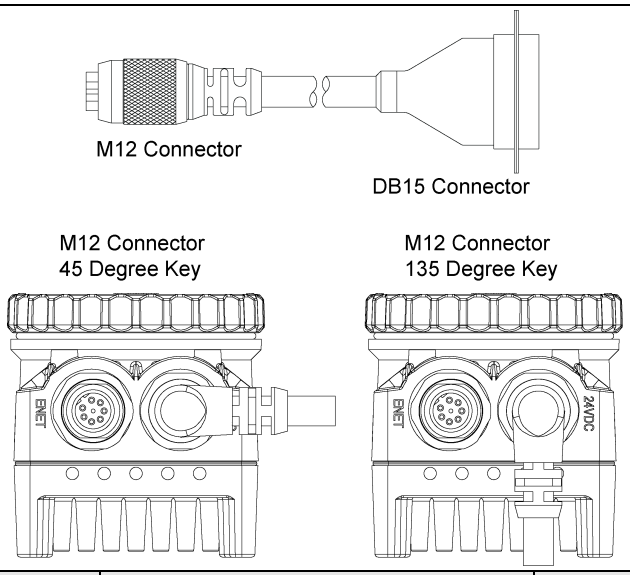

Length	Standard Part #	45-Degree Key Right-Angle Part #	35-Degree Key Right-Angle Part #
2 m	CCB-84901-0901-02	CCB-84901-4001-02	CCB-84901-5001-02
5 m	CCB-84901-0902-05	CCB-84901-4002-05	CCB-84901-5002-05
10 m	CCB-84901-0903-10	CCB-84901-4003-10	CCB-84901-5003-10
15 m	CCB-84901-0904-15	CCB-84901-4004-15	CCB-84901-5004-15

I/O Modules

The following I/O modules are compatible with your vision system, and provide access to additional discrete inputs and outputs.

I/O Module	Vision System	Discrete Inputs	Discrete Outputs
CIO-1400	All In-Sight 5000 series vision systems (except In-Sight 5604)	7 general	2 high-speed, 6 general
CIO-MICRO	All In-Sight 5000 series vision systems	8 general	2 high-speed, 8 general
CIO-MICRO-CC	All In-Sight 5000 series vision systems (except In-Sight 5705, 5705C and 5715)	8 general	2 high-speed, 8 general

Note:

- The CIO-MICRO I/O module only supports In-Sight 5700 series vision systems with firmware version 5.3.0 and higher.
- The CIO-MICRO and CIO-MICRO-CC I/O modules do not support Gigabit pass-through operation. If you need Gigabit operation when you use the In-Sight 5600 series or In-Sight 5700 series vision system, connect a LAN cable from a Gigabit Ethernet switch to the I/O module LAN port and connect the vision system Ethernet cable to the Gigabit Ethernet switch.
- The CIO-MICRO & CIO-MICRO-CC I/O modules support In-Sight 5100 series and 5400 series vision systems with 128MB non-volatile flash memory or higher and support all In-Sight 5600 series vision systems.
- The CIO-MICRO-CC I/O module also adds CC-link networking capability. For detailed connection information, see the *In-Sight® CIO-MICRO and CIO-MICRO-CC I/O Module Installation Manual*.

Installation

Read this section to learn how the vision system connects to its standard components and accessories. For a list of options and accessories, contact your Cognex sales representative.

Note:
- Cables are sold separately.
- If a standard component is missing or damaged, immediately contact your Cognex Authorized Service Provider (ASP) or Cognex Technical Support.

CAUTION: All cable connectors are keyed to fit the connectors on the vision system. Do not force the connections or damage may occur.

Connectors and Indicators

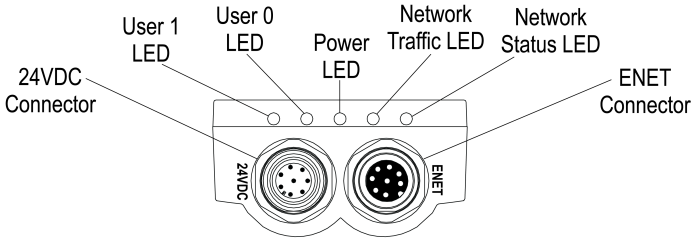

Connector/Indicator	Function
24VDC Connector	Connects the Breakout cable, which provides connections to an external power supply, the acquisition trigger input, high-speed outputs and RS-232 serial communications. For more information, refer to *Breakout Cable Specifications* on page 31. Alternately, this connector is used to attach the I/O Module cable to an optional In-Sight I/O module, which adds general-purpose discrete I/O and light control functionality. For more information, refer to the *I/O Module Cable Specifications* on page 32.
User 1 LED	Green when active. User-configurable within the In-Sight Explorer Discrete Output Settings dialog, using Discrete Output Line 4 (Line 10 for all I/O modules, except the CIO-1400, which uses Line 9).
User 0 LED	Red when active. User-configurable within the In-Sight Explorer Discrete Output Settings dialog, using Discrete Output Line 5 (Line 11 for all I/O modules, except the CIO-1400, which uses Line 10).
Power LED	Green when power is applied.
Network Traffic LED	Flashes green while transmitting and receiving data.
Network Status LED	Green when a network connection is detected.
ENET Connector	Connects the vision system to a network. The ENET connector provides the Ethernet connection to external network devices. For more information, refer to the *5100 and 5400 Series Vision System Ethernet Cable Specifications* on page 29 and *5600 and 5700 Series Vision System Ethernet Cable Specifications* on page 30.

Note:

- For the In-Sight 5100 and 5400 series, when the vision system is powered up, User 0 LED and User 1 LED both momentarily turn on. Then, User 0 LED turns off and User 1 LED stays on. Next, User 0 LED turns on and User 1 LED turns off. Finally, both LEDs momentarily turn on and then turn off.
- For the In-Sight 5600 series and In-Sight 5700 series, when the vision system is powered up, User 0 LED and User 1 LED both momentarily turn on. Then, User 1 LED turns off and User 0 LED stays on. Next, User 1 LED turns on and User 0 LED turns off. Finally, both LEDs momentarily turn on and then turn off.

Install the Lens

1. Remove the protective film covering the threaded lens opening, if present.
2. Attach a C-Mount lens to the vision system. The exact lens focal length needed depends on the working distance and the field of view required for your machine vision application.

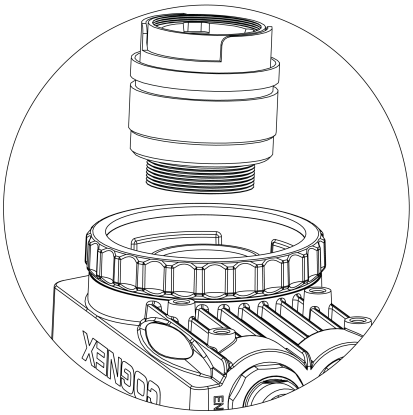

3. If using a lens cover, remove the thread guard and attach the lens to the vision system.

Connect the Ethernet Cable

1. Connect the Ethernet cable's M12 connector to the vision system ENET connector.

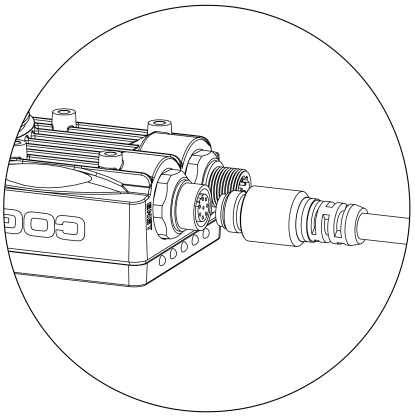

2. Connect the Ethernet cable’s RJ-45 connector to a switch/router or PC, as applicable.

Connect the Breakout Cable

Note: You can clip unused wires short or use a tie made of non-conductive material to tie them back. Keep bare wires separated from the +24 V DC wire.

1. Verify that the 24 V DC power supply is unplugged and not receiving power.
2. Optionally, connect the I/O or serial wires to an appropriate device (for example, a PLC, an encoder, or a serial device). For more information, refer to *Breakout Cable Specifications* on page 31.

   Note: When using an In-Sight 5604 line scan vision system, the RS-232RX wire is used as Encoder A and the RS-232TX wire is used as Encoder B. For more information, refer to *Encoder Inputs (In-Sight 5604 Only)* on page 26.

3. Attach the I/O Breakout cable's +24VDC (White/Green wire) and 24V COMMON (Brown wire) to the corresponding terminals on the power supply. Refer to *Breakout Cable Specifications* on page 31 for wiring details.

   CAUTION: Never connect voltages other than 24 V DC. Always observe the polarity shown.

4. Attach the Breakout cable's M12 connector to the vision system's 24VDC connector.

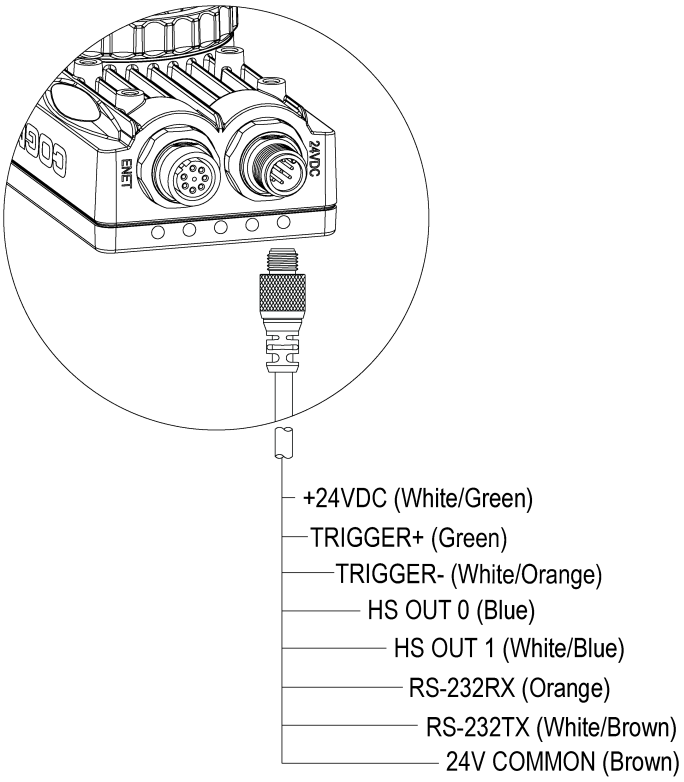

5. Restore power to the 24 V DC power supply and turn it on if necessary.

Specifications

The following sections list general specifications for the In-Sight 5000 series vision systems.

5100, 5100C, 5400C, 5403 and 5400 Vision System Specifications

Specification	5100/5110	5100C	5400C	5403/5413	5400/5410
Minimum Firmware Requirement[1]	In-Sight version 4.4.3				
Job/Program Memory	128MB non-volatile flash memory; unlimited storage using a remote network device.				
Image Processing Memory	256MB SDRAM				
Sensor Type	1/3-inch CCD			1/1.8-inch CCD	1/3-inch CCD
Sensor Properties	5.92mm diagonal, 7.4 x 7.4µm sq. pixels		5.92mm diagonal, 7.4 x 7.4µm sq. pixels	8.8mm diagonal, 4.4 x 4.4µm sq. pixels	5.92mm diagonal, 7.4 x 7.4µm sq. pixels
Maximum Resolution (pixels)[2]	640 x 480		640 x 480	1600 x 1200	640 x 480
Electronic Shutter Speed	16µs to 1000ms		16µs to 1000ms	27µs to 1000ms	16µs to 1000ms
Acquisition	Rapid reset, progressive scan, full-frame integration.				
Bit Depth	256 grey levels (8 bits/pixel)	24-bit color	24-bit color	256 grey levels (8 bits/pixel)	
Frames Per Second[3]	60 full frames per second.		60 full frames per second.	14 full frames per second.	60 full frames per second.
Lens Type	C-mount				
Lens Cover View Port Material	Clear plastic with an abrasion-resistant coating on the exterior side.				
Trigger	1 opto-isolated, acquisition trigger input. Remote software commands via Ethernet and RS-232C.				
Discrete Inputs	None built-in. Additional inputs available using a compatible I/O module. (For more information, refer to *I/O Modules* on page 12.) Unlimited inputs when using an Ethernet I/O system.				

[1] The In-Sight firmware version 5.1.0 and higher is not supported on In-Sight 5100/5110, 5100C, 5400C, 5403/5413 and 5400/5410 vision systems.

[2] You can configure the number of image sensor rows and set them in the In-Sight Explorer software. If you decrease the number of rows, it increases the frames per second acquired by the vision system. Refer to the AcquireImage topic in the *In-Sight® Explorer Help* file for more information.

[3] For In-Sight 5100/5110, 5100C, 5400C, 5403/5413 and 5400/5410 vision systems, the maximum frames per second is job-dependent, based on the minimum exposure for a full image frame capture using the dedicated acquisition trigger, and assumes there is no user interface connection to the vision system.

Specification	5100/5110	5100C	5400C	5403/5413	5400/5410
Discrete Outputs	2 built-in, high-speed outputs. Additional outputs available using a compatible I/O module. (For more information, refer to *I/O Modules* on page 12.) Unlimited outputs when using an Ethernet I/O system.				
Status LEDs	Power, Network Status, Network Traffic, 2 user configurable.				
Network Communication	1 Ethernet port, 10/100 BaseT, TCP/IP protocol. Supports DHCP (factory default), static and link-local IP address configuration.				
1588 Support[1]	Timestamp Resolution: 8ns Synchronization Accuracy Through Transparent Clock: 5µs				
Serial Communication	RS-232C when connected to the Breakout Cable or a compatible I/O module. (For more information, refer to *I/O Modules* on page 12.)				
Power Consumption	24VDC ±10%, 500mA maximum.				
Material	Die-cast aluminum housing.				
Finish	Painted.				
Mounting	Eight M4 threaded mounting holes (four front and four back).				
Dimensions	83.4mm (3.28in) x 124.2mm (4.89in) x 61.4mm (2.42in) with lens cover installed. 43.5mm (1.71in) x 124.2mm (4.89in) x 61.4mm (2.42in) without lens cover installed (includes Thread Guard).				
Weight	350 g (12.3 oz.) Lens cover installed, without lens.				
Operating Temperature	0°C to 45°C (32°F to 113°F)				
Storage Temperature	-30°C to 80°C (-22°F to 176°F)				
Humidity	95%, non-condensing (Operating and Storage)				
Protection	IP67 (with appropriate lens cover properly installed).				
Shock (Shipping and Storage)	80 G Shock with 150 gram lens attached per IEC 68-2-27.				
Vibration (Shipping and Storage)	10 G from 10-500 Hz with 150 gram lens per IEC 68-2-6.				
Regulatory Compliance	CE, FCC, KCC, TÜV SÜD NRTL, RoHS				

[1] 1588 is supported only on vision systems that run firmware version 4.5.0 and later.

5603, 5600 and 5605 Vision System Specifications

Specification	5603/5613	5600/5610	5605/5615
Minimum Firmware Requirement[1]	In-Sight version 4.4.3		In-Sight version 4.4.1
Job/Program Memory	128MB non-volatile flash memory; unlimited storage using a remote network device.		
Image Processing Memory	256MB SDRAM		
Sensor Type	1/1.8-inch CCD	1/3-inch CCD	2/3-inch CCD
Sensor Properties	8.8mm diagonal, 4.4 x 4.4µm sq. pixels	5.92mm diagonal, 7.4 x 7.4µm sq. pixels	11.01mm diagonal, 3.45 x 3.45µm sq. pixels
Maximum Resolution (pixels)[2]	1600 x 1200	640 x 480	2448 x 2048
Electronic Shutter Speed	27µs to 1000ms	32µs to 1000ms	28.8µs to 1000ms
Acquisition	Rapid reset, progressive scan, full-frame integration.		
Bit Depth	256 grey levels (8 bits/pixel)		
Frames Per Second[3]	14 full frames per second.	60 full frames per second.	16 full frames per second.
Lens Type	C-mount		
Lens Cover View Port Material	Clear plastic with an abrasion-resistant coating on the exterior side.		
Trigger	1 opto-isolated, acquisition trigger input. Remote software commands via Ethernet and RS-232C.		
Discrete Inputs	None built-in. Additional inputs available using a compatible I/O module. (For more information, refer to *I/O Modules* on page 12.) Unlimited inputs when using an Ethernet I/O system.		
Discrete Outputs	2 built-in, high-speed outputs. Additional outputs available using a compatible I/O module. (For more information, refer to *I/O Modules* on page 12.) Unlimited outputs when using an Ethernet I/O system.		
Status LEDs	Power, Network Status, Network Traffic, 2 user configurable.		
Network Communication	1 Ethernet port, 10/100/1000 BaseT with auto MDIX. IEEE 802.3 TCP/IP protocol. Supports DHCP (factory default), static and link-local IP address configuration.		

[1] The In-Sight firmware version 5.1.0 and higher is not supported on In-Sight 5603/5613, 5600/5610 and 5605/5615 vision systems.

[2] You can configure the number of image sensor rows and set them in the In-Sight Explorer software. If you decrease the number of rows, it increases the frames per second acquired by the vision system. Refer to the AcquireImage topic in the *In-Sight® Explorer Help* file for more information.

[3] Maximum frames per second are job-dependent, based on the minimum exposure for a full image frame capture using the dedicated acquisition trigger, and assumes there is no user interface connection to the vision system.

Specification	5603/5613	5600/5610	5605/5615
1588 Support[1]	Timestamp Resolution: 8ns Synchronization Accuracy Through Transparent Clock: 5µs		
Serial Communication	RS-232C when connected to the Breakout Cable or a compatible I/O module. (For more information, refer to *I/O Modules* on page 12.)		
Power Consumption	24VDC ±10%, 600mA maximum.		
Material	Die-cast aluminum housing.		
Finish	Painted/Powder coat (back plate).		
Mounting	Eight M4 threaded mounting holes (four front and four back).		
Dimensions	99.9mm (3.93in) x 124.2mm (4.89in) x 61.4mm (2.42in) with lens cover installed. 60.1mm (2.37in) x 124.2m (4.89in) x 61.4mm (2.42in) without lens cover installed.		134.4mm (5.29in) x 124.1mm (4.88in) x 61.4mm (2.42in) with lens cover installed. 53.2mm (2.09in) x 124.1mm (4.88in) x 61.4mm (2.42in) without lens cover installed (includes Thread Guard).
Weight	463 g (16.3 oz.) Lens cover installed, without lens.	409 g (14.4 oz.) Lens cover installed, without lens.	538 g (19.0 oz.) Lens cover installed, without lens.
Operating Temperature (non-circulating air)	0°C to 45°C (32°F to 113°F)[2]		
Operating Temperature (circulating air)	0°C to 50°C (32°F to 122°F)[3]	0°C to 50°C (32°F to 122°F)[4]	0°C to 50°C (32°F to 122°F)[5]
Storage Temperature	-30°C to 80°C (-22°F to 176°F)		
Humidity	95%, non-condensing (Operating and Storage)		
Protection	IP67 (with appropriate lens cover properly installed).		
Shock (Shipping and Storage)	80 G Shock with 150 gram lens attached per IEC 68-2-27.		
Vibration (Shipping and Storage)	10 G from 10-500 Hz with 150 gram lens per IEC 68-2-6.		
Regulatory Compliance	CE, FCC, KCC, TÜV SÜD NRTL, RoHS		

[1] 1588 is supported only on vision systems that run firmware version 4.5.0 and later.

[2] The vision system should be mounted with sufficient clearance on all sides to allow air circulation around and through the cooling posts on the black heat sink.

[3] If you operate the vision system in an environment that is above 40°C, use a fan for additional cooling. If you operate the vision system in an environment that is up to 50°C, ≥16 CFM of air must be moving through the cooling posts on the black heat sink.

[4] If you operate the vision system in an environment that is above 40°C, use a fan for additional cooling. If you operate the vision system in an environment that is up to 50°C, ≥4 CFM of air must be moving through the cooling posts on the black heat sink.

[5] If you operate the vision system in an environment that is above 40°C, use a fan for additional cooling. If you operate the vision system in an environment that is up to 50°C, ≥16 CFM of air must be moving through the cooling posts on the black heat sink.

5604 Line Scan Vision System Specifications

Specification	5604/5614
Minimum Firmware Requirement[1]	In-Sight version 4.4.3
Job/Program Memory	128MB non-volatile flash memory; unlimited storage using a remote network device.
Image Processing Memory	256MB SDRAM
Sensor Type	1-inch CCD
Sensor Properties	14.3 mm x 14µm active area, 14µm x 14µm sq. pixels.
Maximum Resolution (pixels)	1024 x 1 (CCD); 1024 x 8192 (up to 8192 lines for full resolution image).
Acquisition	Line Scan integration.
Bit Depth	256 grey levels (8 bits/pixel)
Lines Per Second	44K lines per second.
Lens Type	C-mount
Lens Cover View Port Material	Clear plastic with an abrasion-resistant coating on the exterior side.
Trigger	1 opto-isolated, acquisition trigger input. Remote software commands via Ethernet and RS-232C.
Discrete Inputs	None built-in. Additional inputs available using a compatible I/O module. (For more information, refer to *I/O Modules* on page 12.) Unlimited inputs when using an Ethernet I/O system.
Discrete Outputs	2 built-in, high-speed outputs. Additional outputs available using a compatible I/O module. (For more information, refer to *I/O Modules* on page 12.) Unlimited outputs when using an Ethernet I/O system.
Encoder Inputs	2 built-in, encoder inputs for use with a 24VDC signal.
Status LEDs	Power, Network Status, Network Traffic, 2 user configurable.
Network Communication	1 Ethernet port, 10/100/1000 BaseT with auto MDIX. IEEE 802.3 TCP/IP protocol. Supports DHCP (factory default), static and link-local IP address configuration.
1588 Support	Timestamp Resolution: 8ns Synchronization Accuracy Through Transparent Clock: 5µs
Serial Communication	RS-232C when connected to compatible I/O module. (For more information, refer to *I/O Modules* on page 12.)
Power Consumption	24VDC ±10%, 600mA maximum.
Material	Die-cast aluminum housing.
Finish	Painted/Powder coat (back plate).
Mounting	Eight M4 threaded mounting holes (four front and four back).
Dimensions	134.4mm (5.29in) x 124.1mm (4.88in) x 61.4mm (2.42in) with lens cover installed. 53.2mm (2.09in) x 124.1mm (4.88in) x 61.4mm (2.42in) without lens cover installed (includes Thread Guard).
Weight	585 g (20.6 oz.) Lens cover installed, without lens.

[1] The In-Sight firmware version 5.1.0 and higher is not supported on In-Sight 5604/5614 vision systems.

Specification	5604/5614
Operating Temperature (non-circulating air)	0°C to 45°C (32°F to 113°F)[1]
Operating Temperature (circulating air)	0°C to 50°C (32°F to 122°F)[2]
Storage Temperature	-30°C to 80°C (-22°F to 176°F)
Humidity	95%, non-condensing (Operating and Storage)
Protection	IP67 (with appropriate lens cover properly installed).
Shock (Shipping and Storage)	80 G Shock with 150 gram lens attached per IEC 68-2-27.
Vibration (Shipping and Storage)	10 G from 10-500 Hz with 150 gram lens per IEC 68-2-6.
Regulatory Compliance	CE, FCC, KCC, TÜV SÜD NRTL, RoHS

[1] The vision system should be mounted with sufficient clearance on all sides to allow air circulation around and through the cooling posts on the black heat sink. If the vision system is not mounted with sufficient clearance, a fan is recommended.

[2] If you operate the vision system in an environment that is above 40°C, use a fan for additional cooling. If you operate the vision system in an environment that is up to 50°C, ≥16 CFM of air must be moving through the cooling posts on the black heat sink.

5705 and 5705C Vision System Specifications

Specification	5705/5715	5705C
Minimum Firmware Requirement	In-Sight version 5.1.0	
Job/Program Memory	128MB non-volatile flash memory; unlimited storage using a remote network device.	
Image Processing Memory	512MB SDRAM	
Sensor Type	2/3-inch CCD	
Sensor Properties	11.01mm diagonal, 3.45 x 3.45µm sq. pixels	
Maximum Resolution (pixels)[1]	2448 x 2048	
Electronic Shutter Speed	14µs to 1000ms	16µs to 1000ms
Acquisition	Rapid reset, progressive scan, full-frame integration.	
Bit Depth	256 grey levels (8 bits/pixel)	24-bit color
Frames Per Second[2]	16 full frames per second.	14 full frames per second.
Lens Type	C-mount	
Lens Cover View Port Material	Clear plastic with an abrasion-resistant coating on the exterior side.	
Trigger	1 opto-isolated, acquisition trigger input. Remote software commands via Ethernet and RS-232C.	
Discrete Inputs	None built-in. Additional inputs available using a compatible I/O module. (For more information, refer to *I/O Modules* on page 12.) Unlimited inputs when using an Ethernet I/O system.	
Discrete Outputs	2 built-in, high-speed outputs. Additional outputs available using a compatible I/O module. (For more information, refer to *I/O Modules* on page 12.) Unlimited outputs when using an Ethernet I/O system.	
Status LEDs	Power, Network Status, Network Traffic, 2 user configurable.	
Network Communication	1 Ethernet port, 10/100/1000 BaseT with auto MDIX. IEEE 802.3 TCP/IP protocol. Supports DHCP (factory default), static and link-local IP address configuration.	
Serial Communication	RS-232C when connected to the Breakout Cable or a compatible I/O module. (For more information, refer to *I/O Modules* on page 12.)	
Power Consumption	24VDC ±10%, 600mA maximum.	
Material	Die-cast aluminum housing.	
Finish	Painted/Powder coat (back plate).	
Mounting	Eight M4 threaded mounting holes (four front and four back).	
Dimensions	134.4mm (5.29in) x 124.1mm (4.88in) x 61.4mm (2.42in) with lens cover installed. 53.2mm (2.09in) x 124.1mm (4.88in) x 61.4mm (2.42in) without lens cover installed (includes Thread Guard).	

[1] You can configure the number of image sensor rows and set them in the In-Sight Explorer software. If you decrease the number of rows, it increases the frames per second acquired by the vision system. Refer to the AcquireImage topic in the *In-Sight® Explorer Help* file for more information.

[2] Maximum frames per second are job-dependent, based on the minimum exposure for a full image frame capture using the dedicated acquisition trigger, and assumes there is no user interface connection to the vision system.

Specification	5705/5715	5705C
Weight	538 g (19.0 oz.) Lens cover installed, without lens.	
Operating Temperature (non-circulating air)	0°C to 45°C (32°F to 113°F)[1]	
Operating Temperature (circulating air)	0°C to 50°C (32°F to 122°F)[2]	
Storage Temperature	-30°C to 80°C (-22°F to 176°F)	
Humidity	95%, non-condensing (Operating and Storage)	
Protection	IP67 (with appropriate lens cover properly installed).	
Shock (Shipping and Storage)	80 G Shock with 150 gram lens attached per IEC 68-2-27.	
Vibration (Shipping and Storage)	10 G from 10-500 Hz with 150 gram lens per IEC 68-2-6.	
Regulatory Compliance	CE, FCC, KCC, TÜV SÜD NRTL, RoHS	

[1] The vision system should be mounted with sufficient clearance on all sides to allow air circulation around and through the cooling posts on the black heat sink.

[2] If you operate the vision system in an environment that is above 40°C, use a fan for additional cooling. If you operate the vision system in an environment that is up to 50°C, ≥16 CFM of air must be moving through the cooling posts on the black heat sink.

I/O Specifications

Cable and connector specifications and connection examples for the acquisition trigger input, encoder inputs (In-Sight 5604 only) and the high-speed outputs are provided in the following sections.

Acquisition Trigger Input

The vision system features one acquisition trigger input, which is optically isolated. You can configure the acquisition trigger input to trigger from an NPN (current sinking) or PNP (current sourcing) device.

Specification	Description	
Voltage	ON: 20 to 28VDC (24VDC nominal) OFF: 0 to 3VDC (8VDC nominal threshold)	
Current	ON: 2.0 to 2.9mA OFF: < 250µA Resistance: ~10 kOhms	
Delay[1]	In-Sight 5100, 5110, 5100C, 5400C, 5400, 5410, 5600, 5610	62µs maximum latency between leading edge of trigger and start of acquisition. Input pulse should be a minimum of 1ms wide.
	In-Sight 5403, 5413, 5603, 5613	66µs maximum latency between leading edge of trigger and start of acquisition. Input pulse should be a minimum of 1ms wide.
	In-Sight 5604, 5614	1 line (approximately equivalent to 23µs, based on a 1.4µs Exposure) is the maximum latency between leading edge of trigger and start of acquisition. Input pulse should be a minimum of 1ms wide.
	In-Sight 5605, 5615, 5705, 5715	52µs maximum latency between leading edge of trigger and start of acquisition. Input pulse should be a minimum of 1ms wide.
	In-Sight 5705C	62µs maximum latency between leading edge of trigger and start of acquisition. Input pulse should be a minimum of 1ms wide.

The Breakout cable can be used to trigger from an NPN photoelectric sensor or PLC output. Connect TRIGGER+ to +24VDC and connect TRIGGER- to the output of the photoelectric sensor. When the output turns ON, it pulls TRIGGER- down to 0VDC, turning the opto-coupler ON. For more information, refer to *Breakout Cable Specifications* on page 31.

The Breakout cable can also be used to trigger from a PNP photoelectric sensor or PLC output. Connect TRIGGER+ to the output of the photoelectric sensor and connect TRIGGER- to 0VDC. When the output turns ON, it pulls TRIGGER+ up to +24VDC, turning the opto-coupler ON. For more information, refer to *Breakout Cable Specifications* on page 31.

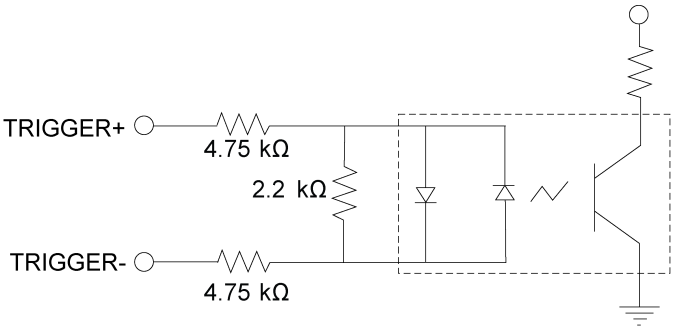

28VDC Max. Across input pins - Transition approx. 8VDC (Nom.)

Note: When using the vision system with the Breakout cable, the polarity of the TRIGGER+ and TRIGGER- pins is not critical. However, when using an optional I/O module, the polarity of the TRIGGER+ and TRIGGER- pins should be observed.

[1] Maximum latency is based on a 1µs trigger debounce.

Encoder Inputs (In-Sight 5604 Only)

The Breakout cable can be used for communication between the vision system and a single or quadrature encoder. For single encoders, the ENCODER A pin must be used. For quadrature encoders, the ENCODER A or ENCODER B pin can be used. The signal from the encoder must be +24VDC. For more information, refer to *Breakout Cable Specifications* on page 31.

Specification	Description
Voltage	ON: 20 to 28VDC (24VDC nominal) OFF: 0 to 3VDC (9.6VDC nominal threshold)
Current	ON: 84 to 118µA OFF: < 11µA Resistance: ~233 kOhms
Maximum Encoder Frequency	99.2KHz (assuming a 50/50 duty cycle)

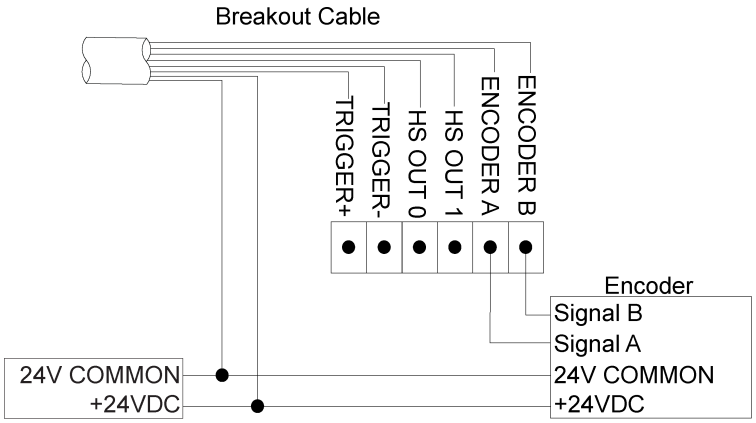

High-Speed Outputs

In-Sight 5000 series vision systems feature two built-in, high-speed outputs. Both of the high-speed outputs are NPN (current sinking) lines. The external load should be connected between the output and the positive supply voltage (28VDC or less). The outputs pull down to 0.1VDC or less when ON (1.25VDC or less for In-Sight 5604 only), which causes current to flow through the load. When the outputs are OFF, no current flows through the load.

Specification	Description	
Voltage	28VDC maximum through external load.	
Current	All In-Sight 5000 series (except In-Sight 5600 series)	200mA maximum sink current.
		OFF state leakage current 200µA maximum.
		External load resistance 140 Ohms to 10 kOhms.
		Each line rated at a maximum 200mA, protected against over-current, short circuit and transients from switching inductive loads. High current inductive loads require external protection diode.
	In-Sight 5600 series	100mA maximum sink current.
		OFF state leakage current 200µA maximum.
		External load resistance 280 Ohms to 10 kOhms.
		Each line rated at a maximum 100mA, protected against over-current, short circuit and transients from switching inductive loads. High current inductive loads require an external protection diode.
Delay[1][2]	±5µs (maximum due to opto-isolators turning ON).	

High-Speed Output - NPN Configuration

The Breakout cable can be used to connect to an NPN-compatible PLC input. Connect HSOUT 0 or HSOUT 1 directly to the PLC input. When enabled, the output pulls down the PLC input to 0VDC. For more information, refer to *Breakout Cable Specifications* on page 31.

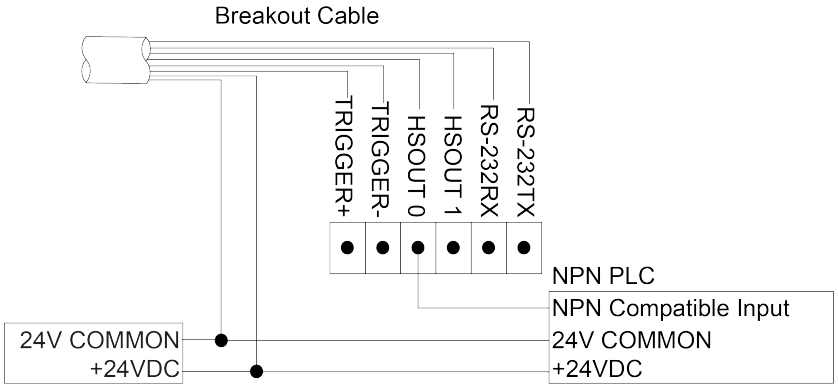

[1] Delay when opto-isolators turn OFF depends on the load to which the output is connected. With a 240 Ohm load, the maximum delay will be ±5µs.

[2] If HSOUT 1 is configured as a Strobe output type within In-Sight Explorer, the maximum strobe latency is ±5µs. For more information, refer to the *In-Sight® Explorer Help* file.

High-Speed Output - PNP Configuration

The Breakout cable can be used to connect high-speed outputs with a PNP-compatible PLC input, if a pull-up resistor (for example, 2.2 kOhms 0.5W) is connected from the output to +24VDC. In this case, the resistor supplies 24VDC to the PLC input. The output will pull the voltage down to 0VDC, turning off the PLC input. This creates an inversion, with the PLC input ON when the vision system output is OFF, and vice-versa. Use an external NPN to PNP converter when this inversion is not desired. For more information, refer to *Breakout Cable Specifications* on page 31.

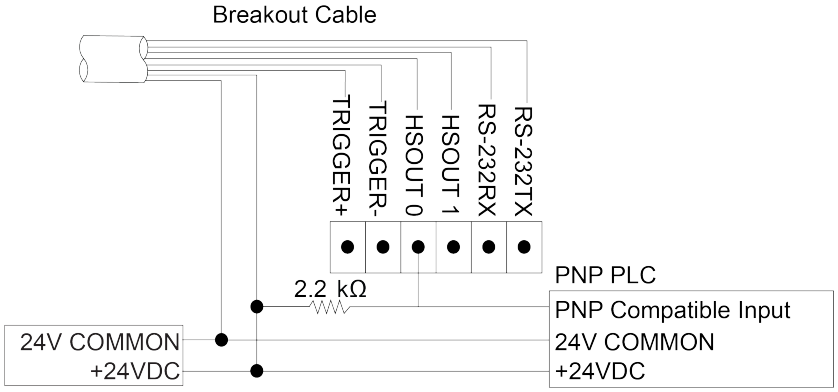

High-Speed Output - Relay/LED Configuration

The Breakout cable can be used to connect the high-speed outputs to a relay, LED or similar load. Connect the negative side of the load to the output and the positive side to +24VDC. When the output switches on, the negative side of the load is pulled down to 0VDC, and 24VDC appears across the load. Use a protection diode for a large inductive load, with the anode connected to the output and the cathode connected to +24VDC. For more information, refer to *Breakout Cable Specifications* on page 31.

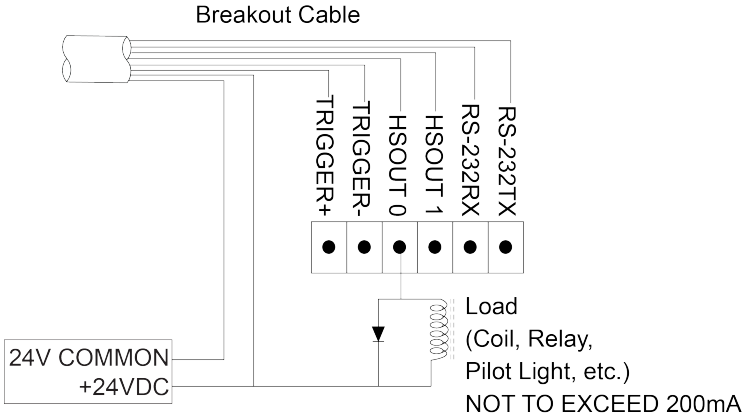

5100 and 5400 Series Vision System Ethernet Cable Specifications

The Ethernet cable is used to connect the vision system to other network devices. The Ethernet cable can be connected to a single device or provide connections to multiple devices via a network switch or router.

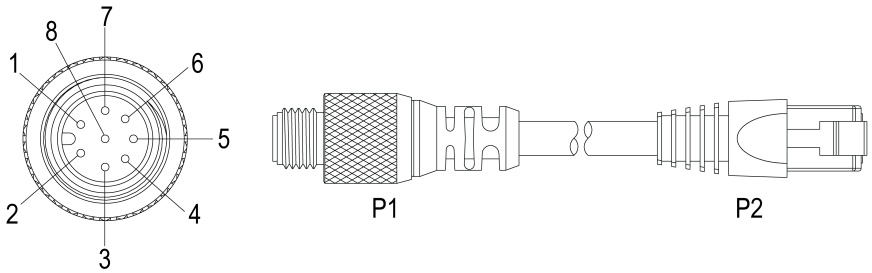

P1 Pin#	Signal Name	Wire Color	P2 Pin#
6	TPO+	White/Orange	1
4	TPO-	Orange	2
5	TPI+	White/Green	3
7	TRMA	Blue	4
1	TRMB	White/Blue	5
8	TPI-	Green	6
2	TRMC	White/Brown	7
3	TRMD	Brown	8

Note:

- Cables are sold separately.
- The wiring for this cable follows standard industrial Ethernet M12 specifications. This varies from the 568B standard.

5600 and 5700 Series Vision System Ethernet Cable Specifications

The Ethernet cable is used to connect the vision system to other network devices. The Ethernet cable can be connected to a single device or provide connections to multiple devices via a network switch or router.

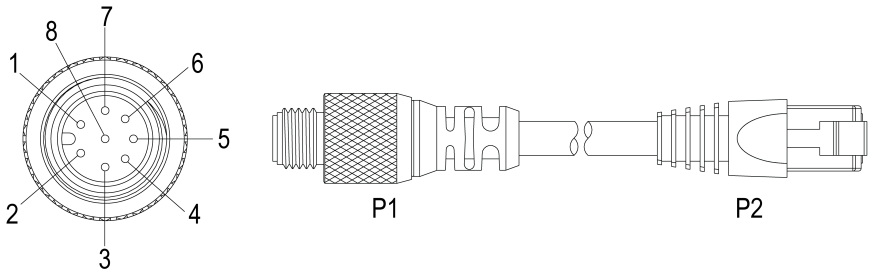

P1 Pin#	Signal Name	Wire Color	P2 Pin#
6	MX0+	White/Orange	1
4	MX0-	Orange	2
5	MX1+	White/Green	3
7	MX2+	Blue	4
1	MX2-	White/Blue	5
8	MX1-	Green	6
2	MX3+	White/Brown	7
3	MX3-	Brown	8

Note:

- Cables are sold separately.
- The wiring for this cable follows the TIA-568 specifications.
- To ensure reliable communication for Gigabit operation, the Ethernet cable must not exceed 75 meters (from the vision system to the endpoint). Cognex cables or patch cables should not exceed 5 meters and HCC (plenum wiring) should not exceed 60 meters. It's not recommended to use a 30 meter cable when using 1000 BaseT operation.
- A switch and a 10 meter cable can be used when experiencing issues. The wiring of the switch and cable should follow the TIA-568 specifications.

Breakout Cable Specifications

The Breakout cable provides connection to an external power supply, RS-232 serial communications, acquisition trigger input, high-speed outputs and encoder inputs (In-Sight 5604 only). The Breakout cable is not terminated. When using the In-Sight 5604, refer to *Encoder Inputs (In-Sight 5604 Only)* on page 26.

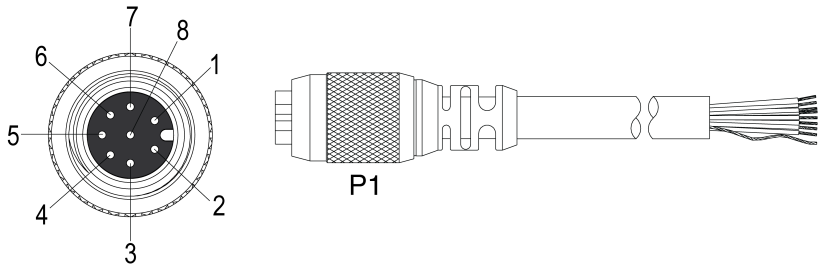

Pin#	Signal Name	Wire Color
1	+24VDC	White/Green
2	TRIGGER+	Green
3	TRIGGER-	White/Orange
4	HSOUT 0	Blue
5	HSOUT 1	White/Blue
6	RS-232 RECEIVE (RxD)[1] (In-Sight 5604 Only: Encoder A)	Orange
7	RS-232 TRANSMIT (TxD)[2] (In-Sight 5604 Only: Encoder B)	White/Brown
8	24V COMMON	Brown

Note:

- Cables are sold separately.
- You can clip unused wires short or use a tie made of non-conductive material to tie them back. Keep bare wires separated from the +24 V DC wire.
- The housing of the vision system is internally connected to the system ground wire (pin 8 of the Breakout cable). Therefore, if the mounting surface of the vision system is at a non-zero ground potential, it is strongly recommended that the vision system be mounted on an isolated or non-conductive mount.

[1] If hardware handshaking is required, an I/O module must be used.

[2] If hardware handshaking is required, an I/O module must be used.

I/O Module Cable Specifications

The I/O Module cable connects the vision system directly to a compatible In-Sight I/O module via the DB15 connector. When the I/O module is used, all power and communication lines used by the vision system are connected using the I/O Module cable.

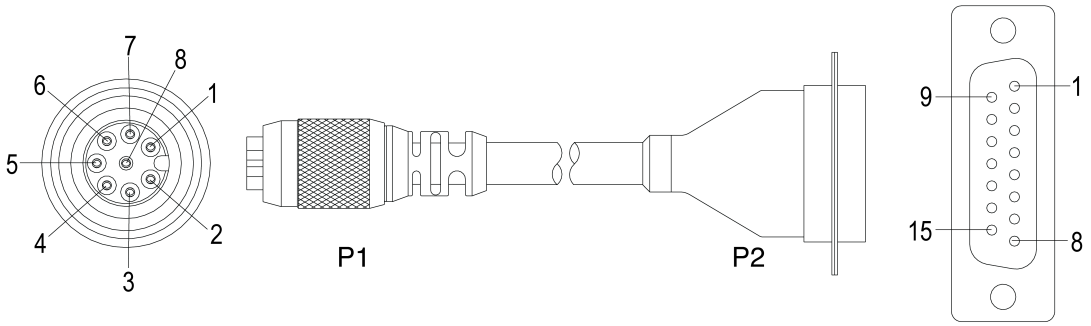

P1 Pin#	Signal Name	P2 Pin#
1	+24VDC	1
2	TRIGGER+	2
3	TRIGGER-	3
4	HSOUT 0	4
5	HSOUT 1	5
6	RS-232 RECEIVE (RxD) (In-Sight 5604 Only: Encoder A)	6
7	RS-232 TRANSMIT (TxD) (In-Sight 5604 Only: Encoder B)	7
8	24V COMMON	8

Note:

- Cables are sold separately.
- Access to the encoder inputs on the In-Sight 5604 Line Scan are not supported by the CIO-MICRO or CIO-MICRO-CC I/O module.
- Refer to your specific I/O module installation manual for more connection information.

Dimensional Drawings

5100, 5100C, 5400, 5400C and 5403 Vision System (With Lens Cover)

Note:
- Dimensions are in millimeters [inches] and are for reference purposes only.
- All specifications are for reference purposes only and can change without notice.

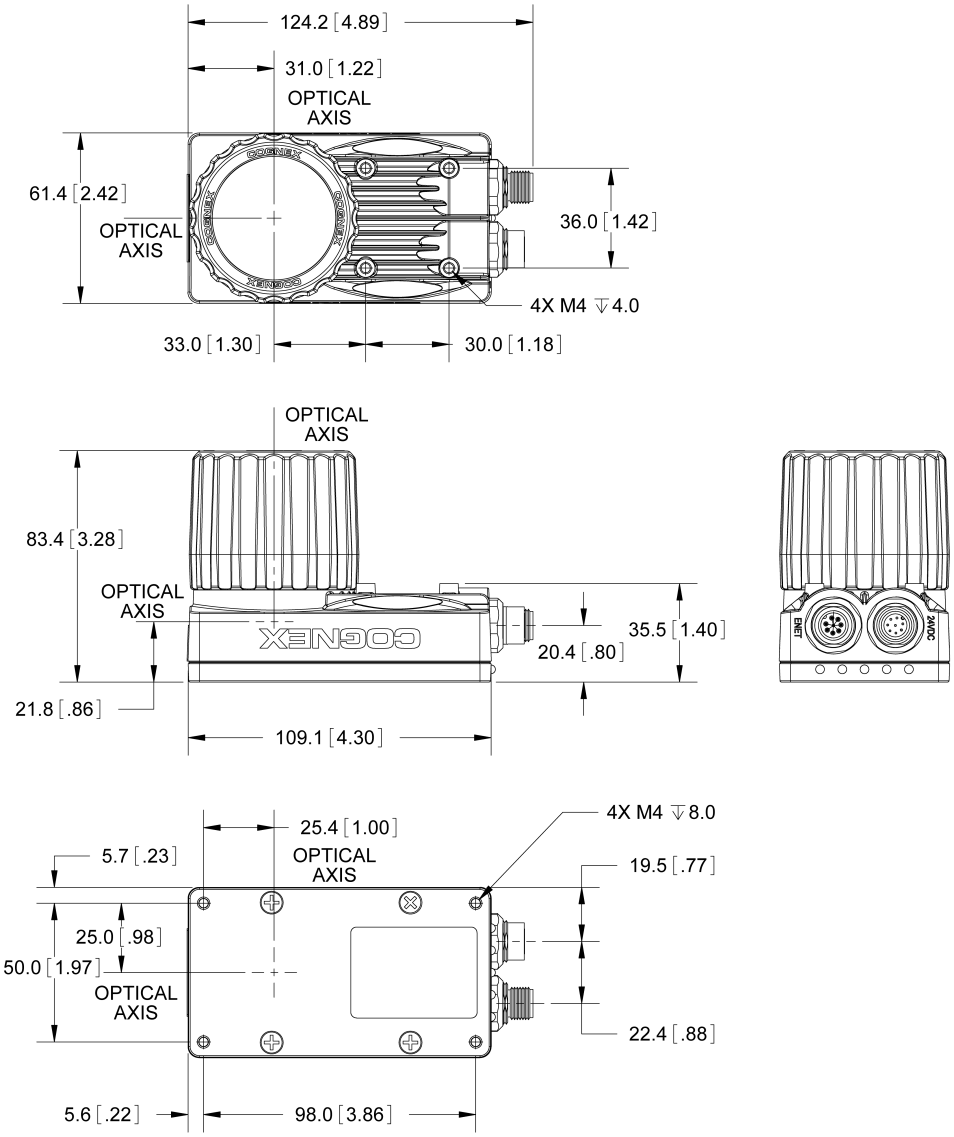

5100, 5100C, 5400, 5400C and 5403 Vision System (Without Lens Cover)

Note:

- Dimensions are in millimeters [inches] and are for reference purposes only.
- All specifications are for reference purposes only and can change without notice.

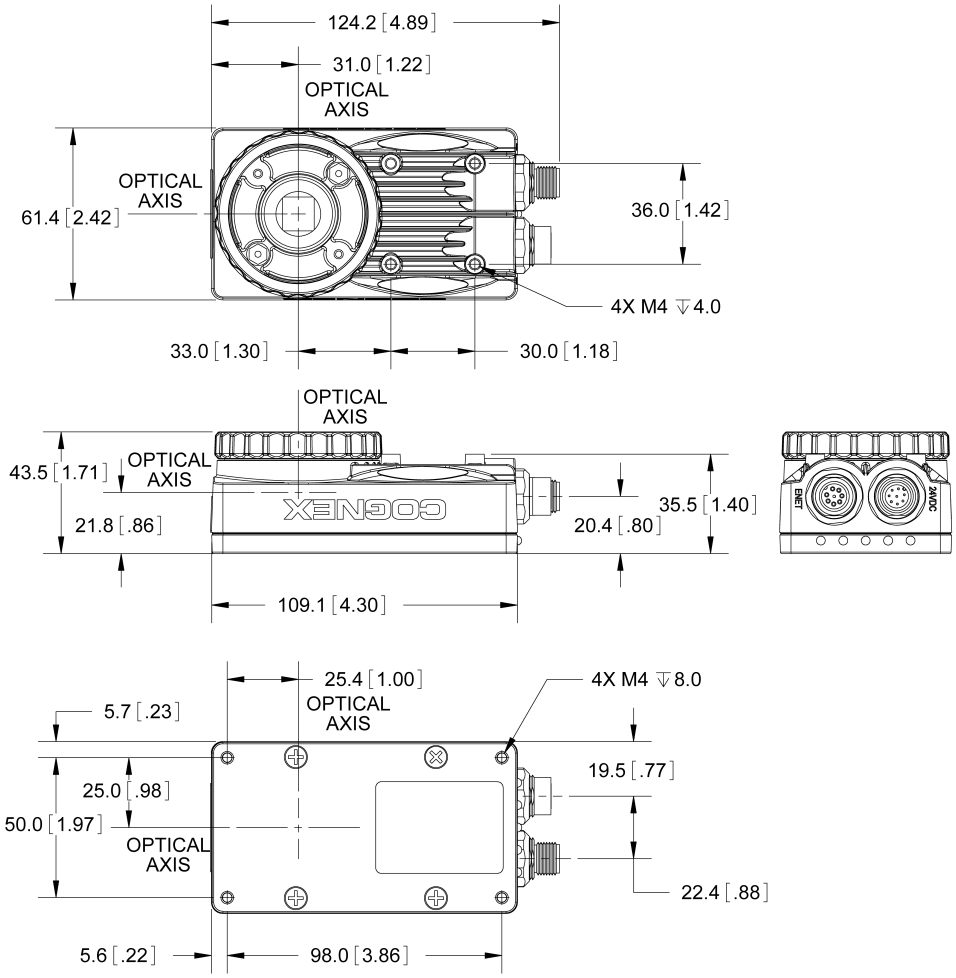

5600 and 5603 Vision System (With Lens Cover)

Note:

- Dimensions are in millimeters [inches] and are for reference purposes only.
- All specifications are for reference purposes only and can change without notice.

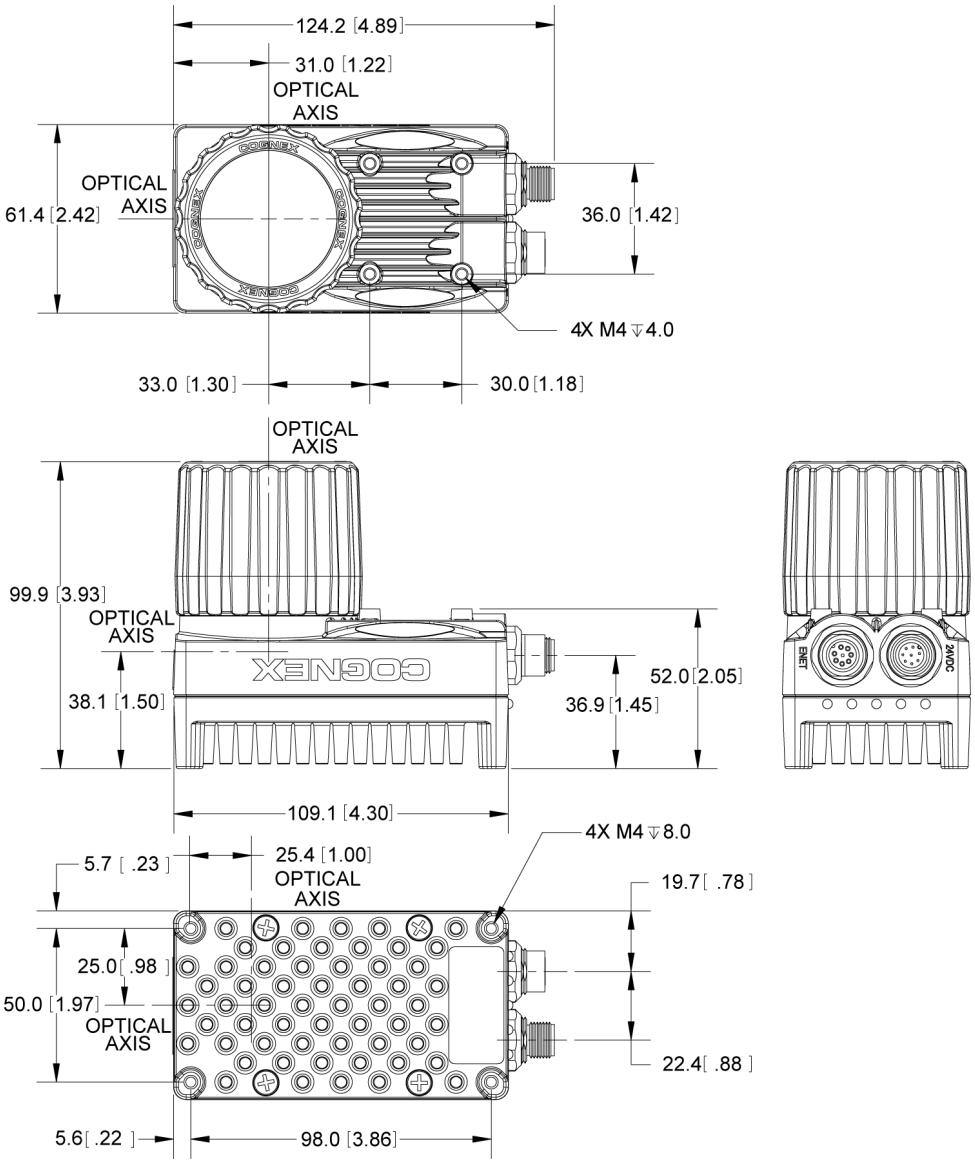

5600 and 5603 Vision System (Without Lens Cover)

Note:

- Dimensions are in millimeters [inches] and are for reference purposes only.
- All specifications are for reference purposes only and can change without notice.

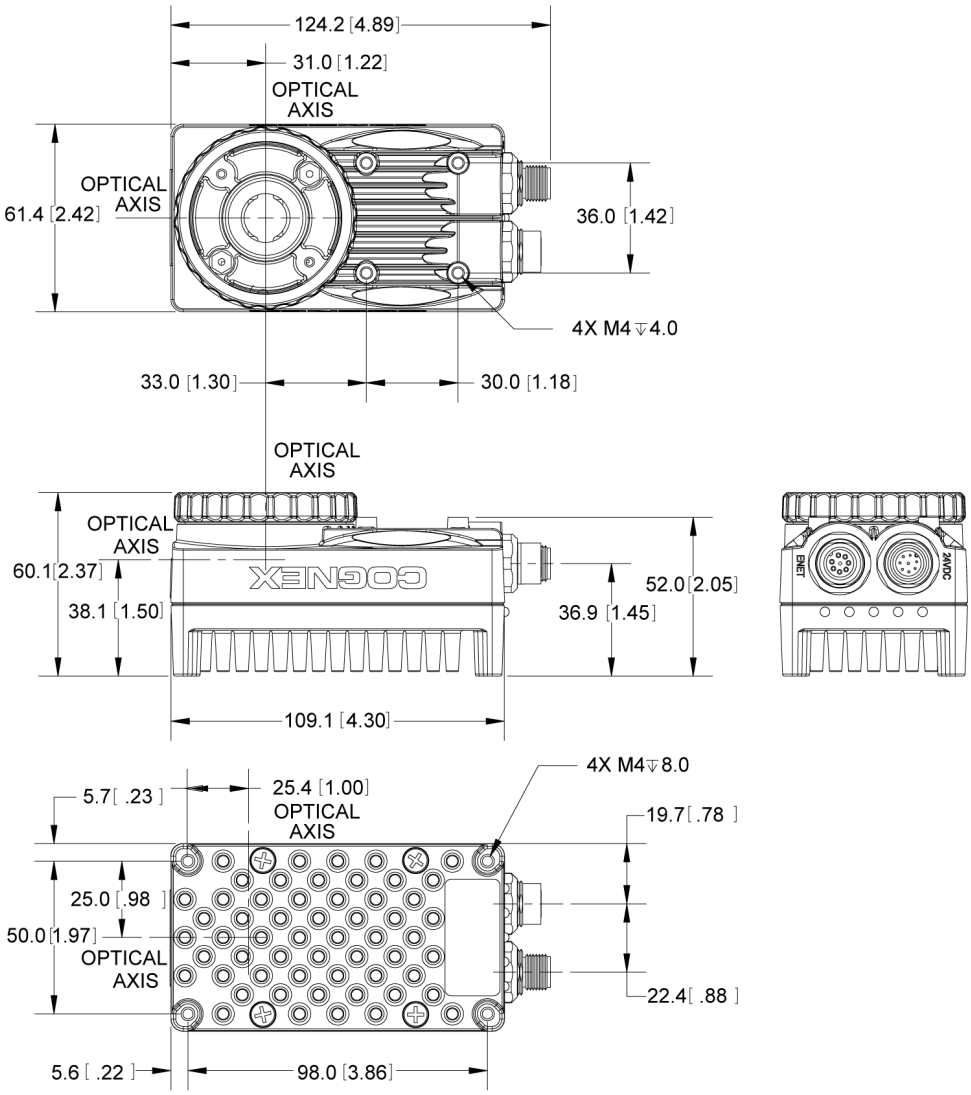

5604, 5605, 5705, and 5705C Vision System (With Lens Cover)

Note:

- Dimensions are in millimeters [inches] and are for reference purposes only.
- All specifications are for reference purposes only and can change without notice.

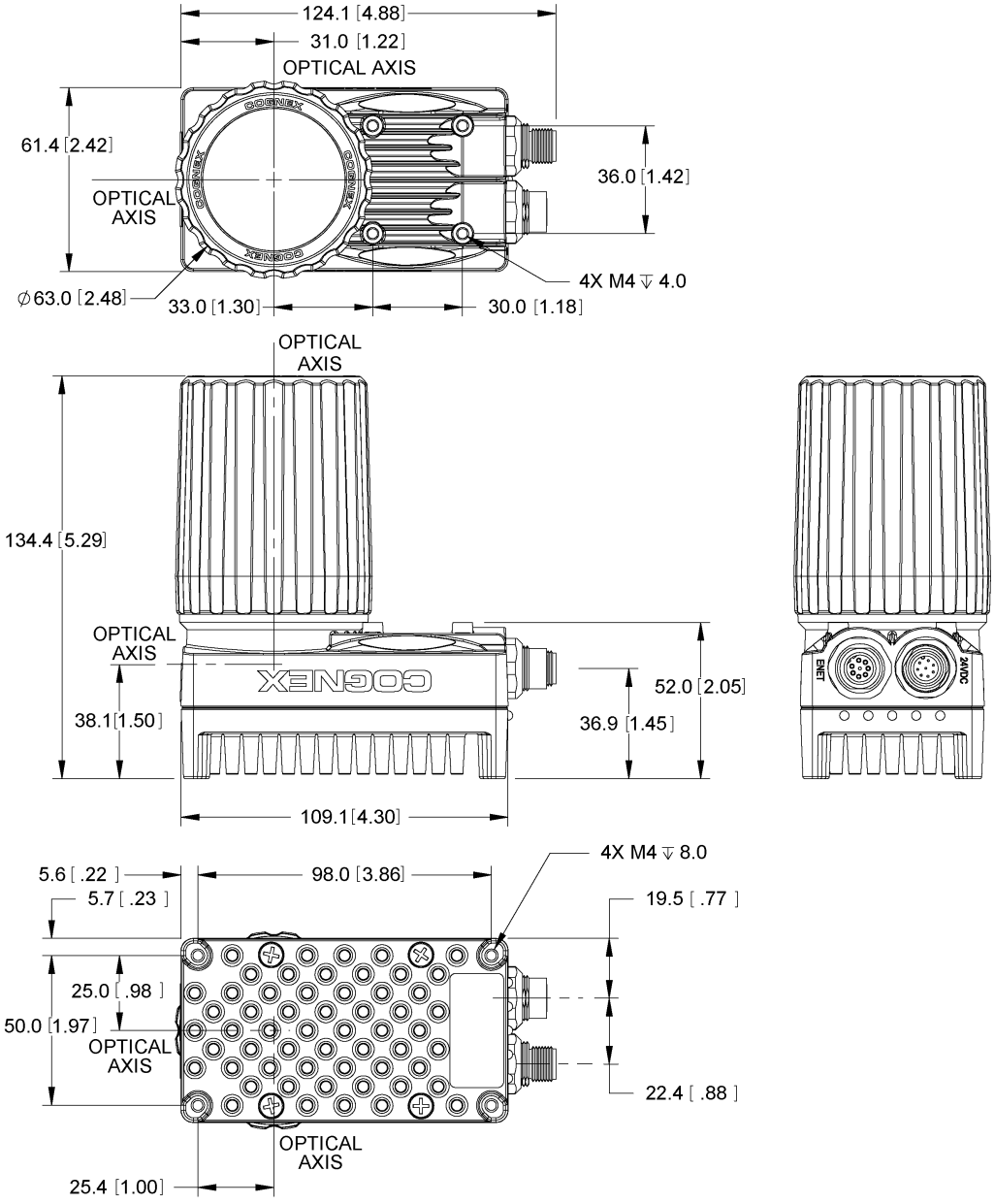

5604, 5605, 5705, and 5705C Vision System (Without Lens Cover)

Note:

- Dimensions are in millimeters [inches] and are for reference purposes only.
- All specifications are for reference purposes only and can change without notice.

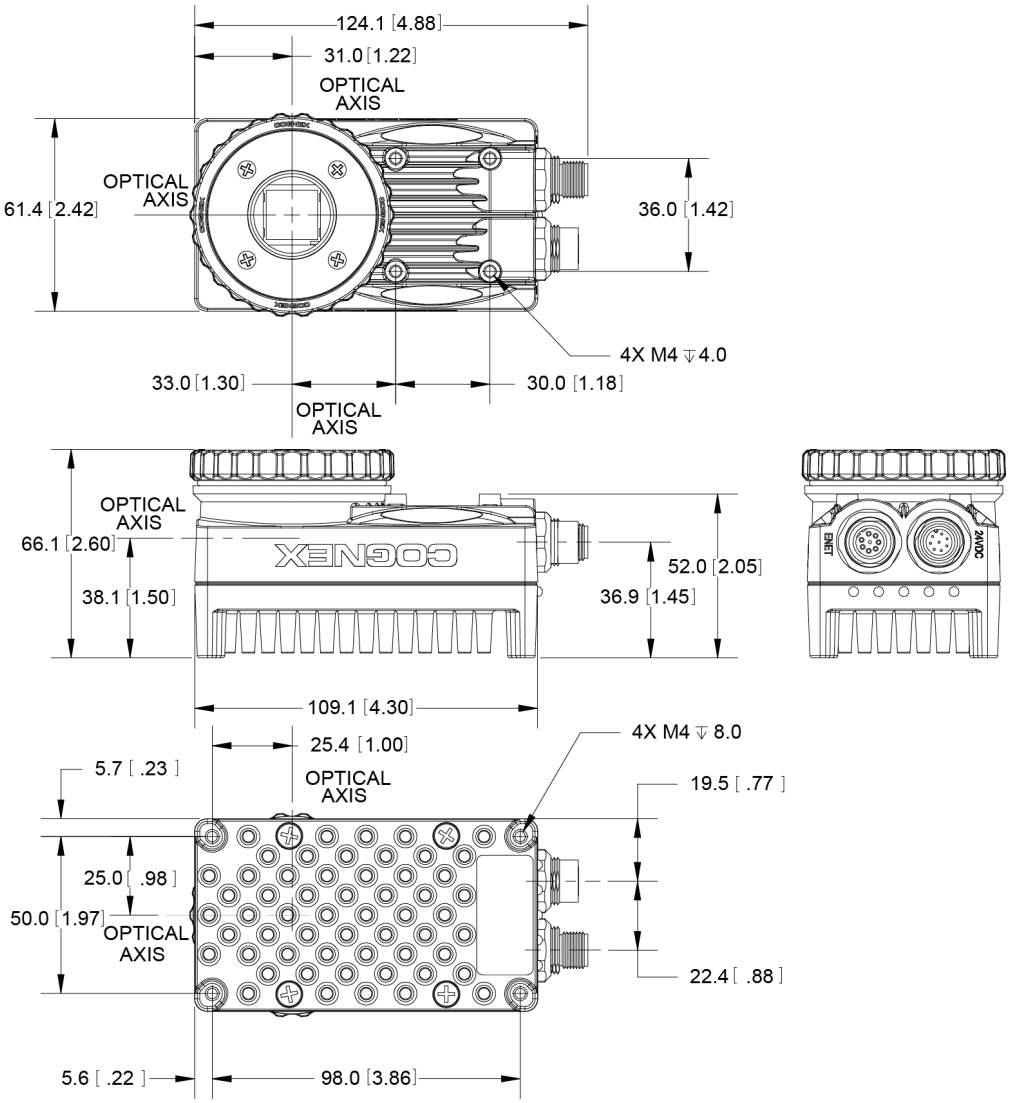

Cleaning/Maintenance

Clean the Vision System Housing

To clean the outside of the vision system housing, use a small amount of mild detergent cleaner or isopropyl alcohol on a cleaning cloth. Do not pour the cleaner on the vision system housing.

⚠ **CAUTION**: Do not attempt to clean any DataMan product with harsh or corrosive solvents, including lye, methyl ethyl ketone (MEK) or gasoline.

Clean the Vision System Image Sensor Window

To remove dust from the outside of the image sensor window, use a pressurized air duster. The air must be free of oil, moisture or other contaminants that could remain on the glass and possibly degrade the image. Do not touch the glass window. If oil or smudges remain, use a cotton bud and alcohol (ethyl, methyl, or isopropyl) to clean the window. Do not pour the alcohol on the window.

Clean the Vision System Lens Cover

To remove dust from the lens cover, use a pressurized air duster. The air must be free of oil, moisture or other contaminants that could remain on the lens cover. To clean the plastic window of the lens cover, use a small amount of isopropyl alcohol on a cleaning cloth. Do not scratch the plastic window. Do not pour the alcohol on the plastic window.