COGNEX

In-Sight® 8000 Series Vision System

Reference Guide

2022 August 22
Revision: 6.4.0.6

Legal Notices

The software described in this document is furnished under license, and may be used or copied only in accordance with the terms of such license and with the inclusion of the copyright notice shown on this page. Neither the software, this document, nor any copies thereof may be provided to, or otherwise made available to, anyone other than the licensee. Title to, and ownership of, this software remains with Cognex Corporation or its licensor. Cognex Corporation assumes no responsibility for the use or reliability of its software on equipment that is not supplied by Cognex Corporation. Cognex Corporation makes no warranties, either express or implied, regarding the described software, its merchantability, non-infringement or its fitness for any particular purpose.

The information in this document is subject to change without notice and should not be construed as a commitment by Cognex Corporation. Cognex Corporation is not responsible for any errors that may be present in either this document or the associated software.

Companies, names, and data used in examples herein are fictitious unless otherwise noted. No part of this document may be reproduced or transmitted in any form or by any means, electronic or mechanical, for any purpose, nor transferred to any other media or language without the written permission of Cognex Corporation.

Copyright © 2015 - 2020. Cognex Corporation. All Rights Reserved.

Portions of the hardware and software provided by Cognex may be covered by one or more U.S. and foreign patents, as well as pending U.S. and foreign patents listed on the Cognex web site at: cognex.com/patents.

The following are registered trademarks of Cognex Corporation:

Cognex, 2DMAX, Advantage, AlignPlus, Assemblyplus, Check it with Checker, Checker, Cognex Vision for Industry, Cognex VSOC, CVL, DataMan, DisplayInspect, DVT, EasyBuilder, Hotbars, IDMax, In-Sight, Laser Killer, MVS-8000, OmniView, PatFind, PatFlex, PatInspect, PatMax, PatQuick, SensorView, SmartView, SmartAdvisor, SmartLearn, UltraLight, Vision Solutions, VisionPro, VisionView

The following are trademarks of Cognex Corporation:

The Cognex logo, 1DMax, 3D-Locate, 3DMax, BGAII, CheckPoint, Cognex VSoC, CVC-1000, FFD, iLearn, In-Sight (design insignia with cross-hairs), In-Sight 2000, InspectEdge, Inspection Designer, MVS, NotchMax, OCRMax, PatMax RedLine, ProofRead, SmartSync, ProfilePlus, SmartDisplay, SmartSystem, SMD4, VisiFlex, Xpand

Portions copyright © Microsoft Corporation. All rights reserved.

Portions copyright © MadCap Software, Inc. All rights reserved.

Other product and company trademarks identified herein are the trademarks of their respective owners.

Regulations and Conformity

Note: For the most current CE declaration and regulatory conformity information, see the Cognex support site: cognex.com/support.

Safety and Regulatory	
Manufacturer	Cognex Corporation One Vision Drive Natick, MA 01760 USA
CE	In-Sight 8100/8100C: Regulatory Model 1AAW In-Sight 8101/8101C: Regulatory Model 1AAW In-Sight 8200/8200C: Regulatory Model 1AAW In-Sight 8400/8400C: Regulatory Model 1AAW In-Sight 8401/8401C: Regulatory Model 1AAW In-Sight 8402/8402C: Regulatory Model 1AAW In-Sight 8405: Regulatory Model 1AAU In-Sight 8500P/8501P: Regulatory Model R00072 In-Sight 8502P/8502CP: Regulatory Model R00072 In-Sight 8505P/8505CP: Regulatory Model R00072 This is a class A product. In a domestic environment this product may cause radio interference in which case the user may be required to take immediate measures. This equipment complies with the essential requirements of the EU Directive 2014/30/EU. Declarations are available from your local representative.
EU RoHS	Compliant to the most recent applicable directive.
FCC	FCC Part 15, Class A This equipment has been tested and found to comply with the limits for a Class A digital device, pursuant to part 15 of the FCC Rules. These limits are designed to provide reasonable protection against harmful interference when the equipment is operated in a commercial environment. This equipment generates, uses, and can radiate radio frequency energy and, if not installed and used in accordance with the instruction manual, may cause harmful interference to radio communications. Operation of this equipment in a residential area is likely to cause harmful interference in which case the user will be required to correct the interference at his own expense.
Korea	In-Sight 8100/8100C: Regulatory Model 1AAW: MSIP-REM-CGX-1AAW In-Sight 8101/8101C: Regulatory Model 1AAW: MSIP-REM-CGX-1AAW In-Sight 8200/8200C: Regulatory Model 1AAW: MSIP-REM-CGX-1AAW In-Sight 8400/8400C: Regulatory Model 1AAW: MSIP-REM-CGX-1AAW In-Sight 8401/8401C: Regulatory Model 1AAW: MSIP-REM-CGX-1AAW In-Sight 8402/8402C: Regulatory Model 1AAW: MSIP-REM-CGX-1AAW In-Sight 8405: Regulatory Model 1AAU: MSIP-REM-CGX-1AAU In-Sight 8500P/8501P: Regulatory Model R00072: R-R-CGX-R00072 In-Sight 8502P/8502CP: Regulatory Model R00072: R-R-CGX-R00072 In-Sight 8505P/8505CP: Regulatory Model R00072: R-R-CGX-R00072 This device is certified for office use only and if used at home, there can be frequency interference problems.

Safety and Regulatory	
TÜV	In-Sight 8100/8100C: Regulatory Model 1AAW In-Sight 8101/8101C: Regulatory Model 1AAW In-Sight 8200/8200C: Regulatory Model 1AAW In-Sight 8400/8400C: Regulatory Model 1AAW In-Sight 8401/8401C: Regulatory Model 1AAW In-Sight 8402/8402C: Regulatory Model 1AAW In-Sight 8405: Regulatory Model 1AAU In-Sight 8500P/8501P: Regulatory Model R00072 In-Sight 8502P/8502CP: Regulatory Model R00072 In-Sight 8505P/8505CP: Regulatory Model R00072
	NRTL: TÜV SÜD SCC/NRTL OSHA Scheme for UL/CAN 61010-1.
	CB report available upon request. TÜV SÜD, IEC/EN 61010-1.

China RoHS

	Hazardous Substances 有害物质					
Part Name 部件名称	Lead (Pb) 铅	Mercury (Hg) 汞	Cadmium (Cd) 镉	Hexavalent Chromium (Cr (VI)) 六价铬	Polybrominated biphenyls (PBB) 多溴联苯	Polybrominated diphenyl ethers (PBDE) 多溴二苯醚
Regulatory Model 1AAU Regulatory Model 1AAW Regulatory Model R00072	X	O	O	O	O	O

This table is prepared in accordance with the provisions of SJ/T 11364.
这个标签是根据SJ / T 11364 的规定准备的。

O: Indicates that said hazardous substance contained in all of the homogeneous materials for this part is below the limit requirement of GB / T26572 - 2011.
表示本部件所有均质材料中含有的有害物质低于GB / T26572 - 2011 的限量要求。

X: Indicates that said hazardous substance contained in at least one of the homogeneous materials used for this part is above the limit requirement of GB / T26572 - 2011.
表示用于本部件的至少一种均质材料中所含的危害物质超过GB / T26572 - 2011 的限制要求。

For European Community Users

Cognex complies with Directive 2012/19/EU OF THE EUROPEAN PARLIAMENT AND OF THE COUNCIL of 4 July 2012 on waste electrical and electronic equipment (WEEE).

This product has required the extraction and use of natural resources for its production. It may contain hazardous substances that could impact health and the environment, if not properly disposed.

In order to avoid the dissemination of those substances in our environment and to diminish the pressure on the natural resources, we encourage you to use the appropriate take-back systems for product disposal. Those systems will reuse or recycle most of the materials of the product you are disposing in a sound way.

The crossed out wheeled bin symbol informs you that the product should not be disposed of along with municipal waste and invites you to use the appropriate separate take-back systems for product disposal.

If you need more information on the collection, reuse, and recycling systems, please contact your local or regional waste administration.

You may also contact your supplier for more information on the environmental performance of this product.

Precautions

To reduce the risk of injury or equipment damage, observe the following precautions when you install the Cognex product:

- The vision system requires a UL or NRTL listed Power over Ethernet (PoE) power source that is IEEE 802.3af or 802.3at compliant and meets the following rating requirements:
  - For In-Sight 8100, 8200 and 8400 series vision systems, it must be rated Class 0, 2, 3 or 4, or at least 6.49 Watts.
  - For the In-Sight 8500 series vision system, it must be rated Class 0, 3 or 4, or at least 12.95 Watts.

  A non-compliant PoE source creates a risk of fire or shock and can damage the components. Applicable national and local wiring standards and rules must be followed.
- This product is intended for industrial use in automated manufacturing or similar applications.
- The safety of any system incorporating this product is the responsibility of the assembler of the system.
- Do not install Cognex products where they are exposed to environmental hazards such as excessive heat, dust, moisture, humidity, impact, vibration, corrosive substances, flammable substances, or static electricity.
- Route cables and wires away from high-current wiring or high-voltage power sources to reduce the risk of damage or malfunction from the following causes: over-voltage, line noise, electrostatic discharge (ESD), power surges, or other irregularities in the power supply.
- Do not expose the image sensor to laser light. Image sensors can be damaged by direct, or reflected, laser light. If your application requires laser light that might strike the image sensor, use a lens filter at the corresponding laser wavelength. For suggestions, contact your local integrator or application engineer.
- This product does not contain user-serviceable parts. Do not make electrical or mechanical modifications to product components. Unauthorized modifications can void your warranty.
- Changes or modifications not expressly approved by the party responsible for regulatory compliance could void the user’s authority to operate the equipment.
- Include service loops with cable connections.
- Ensure that the cable bend radius begins at least six inches from the connector. Cable shielding can be degraded or cables can be damaged or wear out faster if a service loop or bend radius is tighter than 10X the cable diameter.
- This device should be used in accordance with the instructions in this manual.
- All specifications are for reference purposes only and can change without notice.

Table of Contents

Legal Notices **2**

Regulations and Conformity **3**

China RoHS 5

For European Community Users 5

Precautions **6**

Table of Contents **7**

Symbols **9**

Introduction **10**

Support 10

Standard Components 10

Accessories 11

Cables 11

Mounting Brackets 12

I/O Modules 12

Connectors and Indicators 13

Installation **14**

Install the Mounting Bracket (BKT-IS8K-01) 14

Install the Air-Cooled Mounting Bracket (BKT-IS8K-02) 15

Install the Lens 17

Connect the Breakout Cable 17

Connect the Ethernet Cable 18

Connect the CIO-MICRO I/O Module (Optional) 19

Specifications **24**

8100 Series Vision System Specifications 24

8200 Series Vision System Specifications 26

8400, 8401 & 8402 Vision System Specifications 28

8405 Vision System Specifications 30

8500 Series Vision System Specifications 32

Acquisition Trigger Input 34

High-Speed Outputs 35

High-Speed Output - NPN Configuration 36

High-Speed Output - PNP Configuration 36

High-Speed Output - Relay/LED Configuration 37

Breakout Cable 38

I/O Module Cable 39

Ethernet Cable (CCB-84901-2xxx-xx) 40

Ethernet Cable (CGE-CBL-SHLD-xM) 41

Dimensions 42

8100 Series, 8200 Series, 8400, 8401 & 8402 Vision System 42

8405 Vision System 43

8500 Series Vision System 44

Mounting Bracket (BKT-IS8K-01) 45

Mounting Bracket (BKT-IS8K-02) 46

Cleaning/Maintenance **47**
Clean the Housing 47
Clean the Vision System Image Sensor Window 47
Clean the Cover 47

Symbols

The following symbols indicate safety precautions and supplemental information:

WARNING: This symbol indicates a hazard that could cause death, serious personal injury or electrical shock.

CAUTION: This symbol indicates a hazard that could result in property damage.

Note: This symbol indicates additional information about a subject.

Tip: This symbol indicates suggestions and shortcuts that might not otherwise be apparent.

Introduction

The In-Sight® vision system is a compact, network-ready, stand-alone machine vision system used for automated inspection, measurement, identification and robot guidance applications on the factory floor. All models can be easily configured remotely over a network using an intuitive user interface.

Support

Many information resources are available to help you use the vision system:

- The *In-Sight® Explorer Help* and *EasyBuilder Help* files, provided with In-Sight Explorer software.
- On-demand training: cognex.com/on-demand-training.aspx.
- The In-Sight online support site: cognex.com/support/insight.

Note: For the latest documentation, visit: support.cognex.com/documentation/in-sight.

Standard Components

Note:
- Cables are sold separately.
- If a standard component is missing or damaged, immediately contact your Cognex Authorized Service Provider (ASP) or Cognex Technical Support.

Component	Description
Vision System	Provides image acquisition, vision processing, job storage, Ethernet connectivity and discrete I/O.
Ferrite	Ferrite included for attachment to the accessory Breakout cable or I/O Module cable. **Note**: The ferrite is only included with the In-Sight 8405 vision system.

Accessories

You can purchase the following components separately. For a list of options and accessories, contact your local Cognex sales representative.

Cables

Note: Cables are sold separately.

CAUTION: All cable connectors are keyed to fit the connectors on the vision system. Do not force the connections or damage may occur.

Accessory	Part Number	Accessory Image
Ethernet Cable, X-coded M12-8 to RJ-45	CCB-84901-2001-xx (straight, xx specifies length: 2 m, 5 m, 10 m, 15 m, 30 m)	
Ethernet Cable, X-coded M12-8 to RJ-45	CCB-84901-2002-xx (right-angled, xx specifies length: 2 m, 5 m, 10 m)	
Ethernet Cable, Robotic X-Coded M12-8 to RJ-45	CCB-84901-2RBT-xx (straight, xx specifies length: 2 m, 5 m, 10 m)	
Ethernet Cable, RJ-45 to RJ-45 **Note**: This cable is only supported with the In-Sight 8405 vision system.	CGE-CBL-SHLD-xM (x specifies length: 5 m, 10 m, 20 m)	
Ethernet Cable, RJ-45 to Horizontal Screw-Locking RJ-45 **Note**: This cable is only supported with the In-Sight 8405 vision system.	CGE-CBL-FLEX-H-xM (x specifies length: 5 m, 10 m, 20 m)	
Breakout Cable, M8 to Flying Lead	CCB-M8IO-xx (xx specifies length: 0.6 m, 2 m, 5 m, 10 m, 15 m)	
I/O Module Cable M12-8 to DB15	CCB-M8DSIO-xx (xx specifies length: 0.7 m, 2 m, 5 m, 10 m, 15 m)	

Mounting Brackets

Accessory	Part Number	Accessory Image
Mounting bracket, M3 x 8 mm screws (quantity 2) and M3 x 5 mm screws (quantity 2). Also has 1/4 - 20 and M6 mounting holes. **Note**: If attaching the mounting bracket to the In-Sight 8500 series vision system, you must use M3 x 8 mm screws (quantity 4).	BKT-IS8K-01	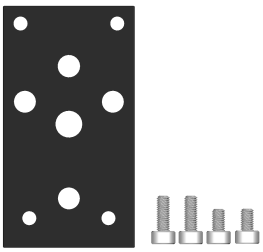
Air-cooled mounting bracket, M3 x 8 mm screws (quantity 4), M3 x 5 mm screws (quantity 2), M3 One-Touch fittings (quantity 2), and 1.5 mm Allen wrench.	BKT-IS8K-02	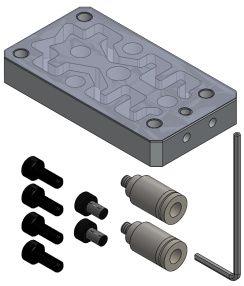

I/O Modules

Accessory	Part Number	Accessory Image
CIO-MICRO I/O Module **Note**: The CIO-MICRO I/O module supports In-Sight 8000 series vision systems with firmware version 5.3.0 and higher.	CIO-MICRO-00	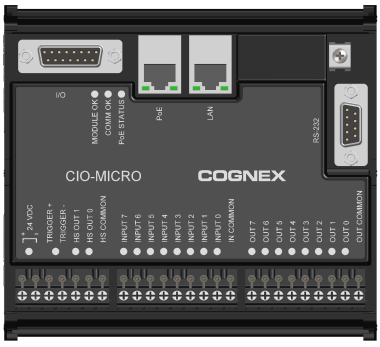

Connectors and Indicators

In-Sight 8100 Series, 8200 Series, 8400, 8401 & 8402	In-Sight 8405	In-Sight 8500 Series
	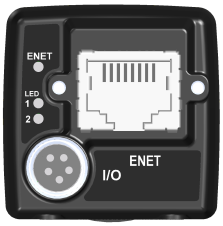	

Connector/Indicator	Description
ENET LED	• 1000-BaseT: LED turns on when the vision system is receiving power during startup, and blinks green once network traffic is detected. • 100-BaseT: LED turns on when the vision system is receiving power during startup, and blinks green and red (appears orange) once network traffic is detected. • 10-BaseT: LED turns on when the vision system is receiving power during startup, and blinks red once network traffic is detected.
LED 1	Green when active. User-configurable within the In-Sight Explorer Discrete I/O Settings dialog, using Output Line 4.
LED 2	Red when active. User-configurable within the In-Sight Explorer Discrete I/O Settings dialog, using Output Line 5.
I/O Port	The I/O port is an M8 port that provides connection to the acquisition trigger input and high-speed outputs via the Breakout cable or I/O Module cable. For more information, see *Breakout Cable* on page 38 and *I/O Module Cable* on page 39.
ENET Port	The ENET port is a 10/100/1000 port that provides Gigabit Ethernet connectivity and supplies Power over Ethernet (PoE) via the Ethernet cable. For more information, see *Ethernet Cable (CCB-84901-2xxx-xx)* on page 40 and *Ethernet Cable (CGE-CBL-SHLD-xM)* on page 41.

Note:

- When initially powered up, the ENET LED turns on and is orange and LED 1 turns on and is steady green for approximately 10 seconds. Next, LED 2 flashes green and then red, and then both LED 1 and LED 2 turn off. Next, the ENET LED turns off and then momentarily flashes when a network connection is established, and then begins blinking once network traffic is detected.
- If both LED 1 and LED 2 are solid red, the vision system's firmware update was interrupted. For more information, refer to the Update Firmware Dialog topic in the *In-Sight® Explorer Help* file.

Installation

Read this section to learn how the vision system connects to its standard components and accessories. For a list of options and accessories, contact your Cognex sales representative.

Note: Cables are sold separately.

CAUTION: All cable connectors are keyed to fit the connectors on the vision system. Do not force the connections or damage may occur.

Install the Mounting Bracket (BKT-IS8K-01)

Note:

- When attaching the 8100, 8200, or 8400 series vision system to the mounting bracket, use the M3 screws supplied with the mounting kit.
- When attaching the 8500 series vision system to the mounting bracket, use M3x8mm socket head screws.
- If using the 1/4-20 or M6 mounting holes, the thread length of the screw should not exceed 8 mm.
- For more information, refer to *Mounting Bracket (BKT-IS8K-01)* on page 45.

CAUTION: It is recommended that the vision system be grounded, either by mounting the vision system to a fixture that is electrically grounded or by attaching a wire from the vision system's mounting fixture to frame ground or Earth ground.

1. Align the mounting bracket with the mounting holes on the vision system.
2. Insert the M3 screws into the mounting holes and tighten using a 2.5 mm hex wrench. The maximum torque is 0.3 Nm (2.5 in-lb).

8100/8200/8400 Series Vision System	8500 Series Vision System
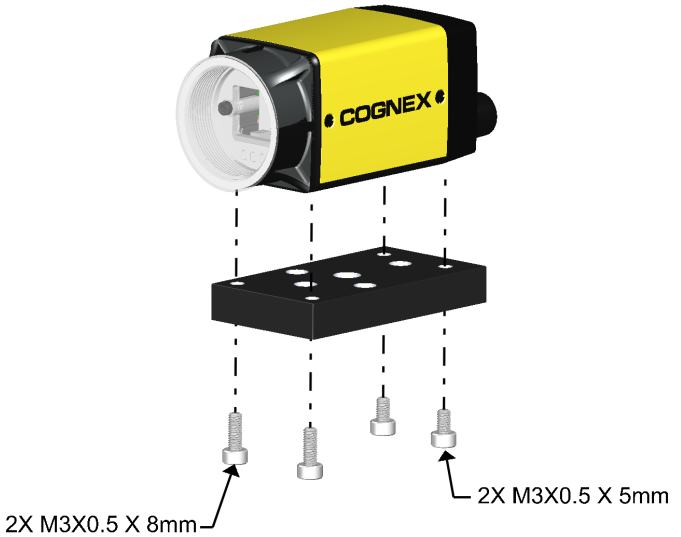	

Install the Air-Cooled Mounting Bracket (BKT-IS8K-02)

Note: When attaching the vision system to the mounting bracket, use the M3 screws supplied with the mounting kit. If using the 1/4-20 or M6 mounting holes, the thread length of the screw should not exceed 8 mm. For more information, refer to *Mounting Bracket (BKT-IS8K-02)* on page 46.

CAUTION: Make sure that the vision system is grounded, either by mounting the vision system to a fixture that is electrically grounded or by attaching a wire from the mounting fixture of the vision system to frame ground or Earth ground.

1. Remove the liner from the thermal pad on the mounting bracket by peeling it back from one corner. Smooth over the grainy surface on the thermal pad underneath.
2. Align the mounting bracket with the mounting holes on the vision system.
3. Insert the M3 screws into the mounting holes and tighten using a 2.5 mm hex wrench. The maximum torque is 0.3 Nm (2.5 in-lb).

8100/8200/8400 Series Vision System	8500 Series Vision System
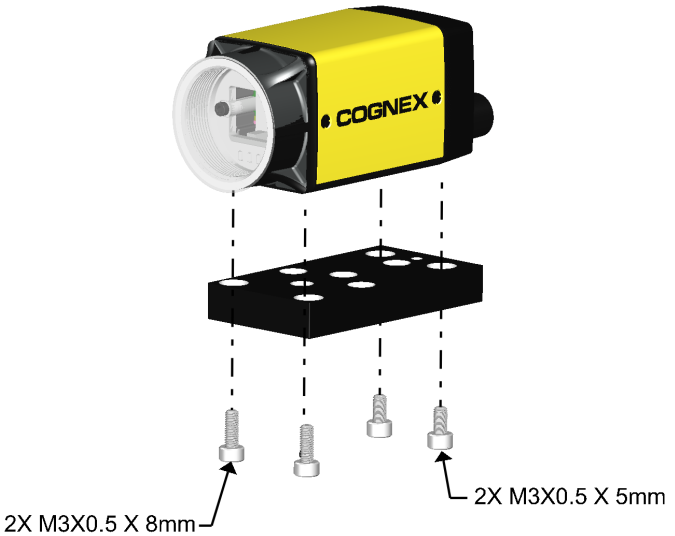	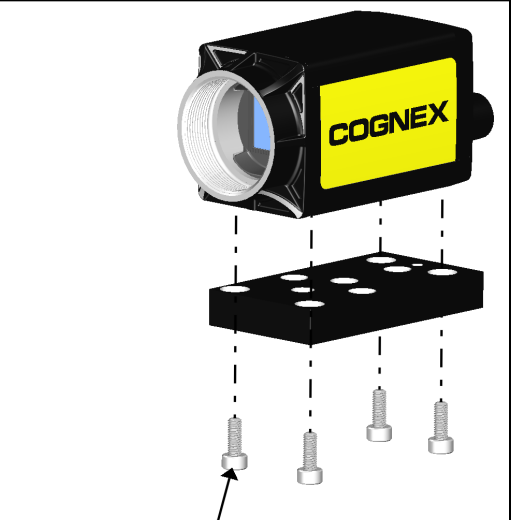

4. For high-performance applications, you can connect the mounting bracket to compressed air. The maximum pressure is 2 bar (30 Psi).
   - To exhaust air away from the process area, either use two M3 barbed fittings or two M3 one-touch fittings with 4 mm tubing.

     For optimal cooling of the mounted vision system CPU, make sure that the air intake is the hole of the mounting bracket that is closest to the vision system I/O port, and the exhaust is the hole that is closest to the vision system ENET port.

M3 Barbed Fitting	M3 One-Touch Fitting

   - If simply plumbing air through the bracket, you can use a single larger one-touch fitting and larger tubing.

5. Optionally, connect the tubing to a flow meter or air regulator.

Install the Lens

1. Remove the protective film covering the threaded lens opening, if present.
2. Attach a C-Mount lens to the vision system. The exact lens focal length needed depends on the working distance and the field of view required for your machine vision application.

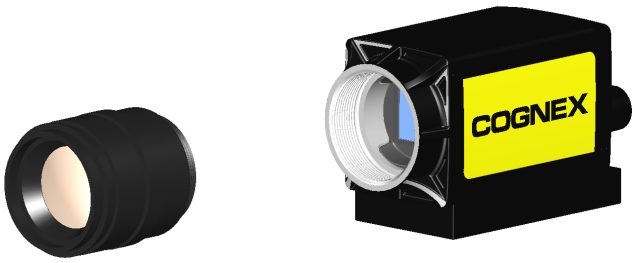

Connect the Breakout Cable

The vision system's I/O connector supplies connections for the acquisition trigger and high-speed outputs.

Note:
- I/O wiring or adjustments to I/O devices should be performed when the vision system is not receiving power.
- The Ethernet cable should be unplugged, or the PoE source powered down before making adjustments to the connections at the far end of the Breakout cable.
- You can clip unused wires short or use a tie made of non-conductive material to tie them back.

1. If installing the In-Sight 8405 vision system, attach the ferrite around the Breakout cable, adjacent to the strain relief on the cable.

   CAUTION: A ferrite is included with the In-Sight 8405 vision system standard components. To reduce emissions, the ferrite must be attached to the Breakout cable.

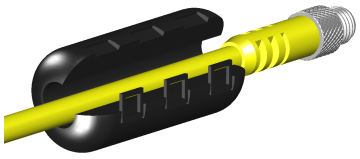

2. Connect the Breakout cable's M8 connector to the vision system's I/O connector.

3. Connect the trigger and high-speed I/O wires to an appropriate device (for example, a PLC, trigger sensor or strobe light). For more information, refer to *Breakout Cable* on page 38.

Connect the Ethernet Cable

The vision system's ENET connector provides the Ethernet connection for network communications and supplies power to the vision system.

Note: The following steps illustrate how to connect to a third-party PoE injector or a PoE switch to supply power to the vision system. The In-Sight CIO-MICRO I/O module can also be used to supply power to the In-Sight 8100, 8200 or 8400 series vision system. For more information, see *Connect the CIO-MICRO I/O Module (Optional)* on page 19.

CAUTION:

- The Ethernet cable must be shielded. For the In-Sight 8405 vision system, Cognex strongly recommends Cat 6 or Cat 7 Ethernet cables with S/STP shielding.
- The Ethernet cable shield must be grounded at the far end. If using a PoE injector, a ground wire should be connected from the Ethernet shield at the PoE injector to frame ground or Earth ground, and a digital voltmeter used to validate the grounding. If using a PoE switch, it should have a metal case, with the case grounded to frame ground or Earth ground.

1. Connect the Ethernet cable's M12 connector to the vision system ENET connector.

If installing the In-Sight 8405 vision system and using a compatible horizontal screw-locking Ethernet cable, use a screw driver to tighten the connector screws until snug. The screws must be tight to ensure a reliable connection.

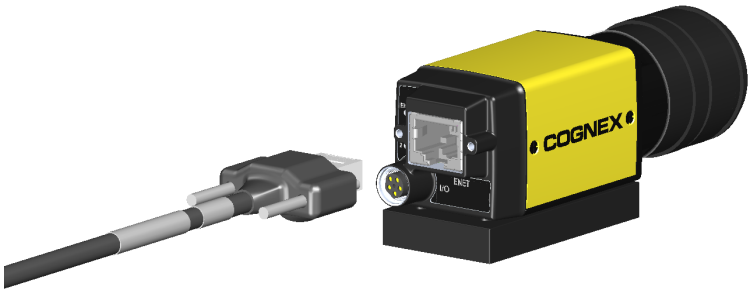

2. Connect the other end of the cable to a PoE injector or a PoE switch.

Note:

- The In-Sight 8100, 8200 and 8400 series vision system must be connected to a Class 0, 2, 3 or 4 PoE power source, rated for at least 6.49 Watts.
- The In-Sight 8500 series vision system must be connected to a Class 0, 3 or 4 PoE power source, rated for at least 12.95 Watts.

3. Restore power to the PoE injector or PoE switch's 24VDC power supply and turn it on if necessary.

Connect the CIO-MICRO I/O Module (Optional)

The following steps illustrate how to connect the vision system to the In-Sight CIO-MICRO I/O module.

Note:

- The CIO-MICRO I/O module supports In-Sight 8000 series vision systems with firmware version 5.3.0 and higher.
- The In-Sight 8500 series vision system must be connected to a Class 0, 3 or 4 PoE power source, rated for at least 12.95 Watts. The CIO-MICRO I/O module is a Class 2 PoE device and therefore cannot be used to supply power to the In-Sight 8500 series vision system via the I/O module's PoE port. Instead, connect the In-Sight 8500 series vision system's Ethernet cable to a Class 0, 3 or 4 PoE power source and establish a connection to I/O module over the local area network using In-Sight Explorer. For more information, see *Connect the Ethernet Cable* on page 18.
- I/O wiring or adjustments to I/O devices should be performed when the vision system is not receiving power.

CAUTION: Never connect the I/O module to a power source other than 24VDC. Any other voltage creates a risk of fire or shock and can damage the hardware. Do not connect the 24VDC power source to any terminals other than the 24VDC + and – power terminals.

1. Verify that the 24VDC power supply is unplugged and not receiving power.
2. Use a screwdriver to loosen the I/O module's power terminals (labeled 24VDC + and –).
3. Insert the 24VDC + and – wires (16 - 22 AWG, solid or stranded wire) from the power supply into the 24VDC + and – terminals on the I/O module.
4. Tighten the screw terminals with the screwdriver to secure the wire leads in the terminal block; the maximum torque is 0.1921 Nm (1.7 in-lb).

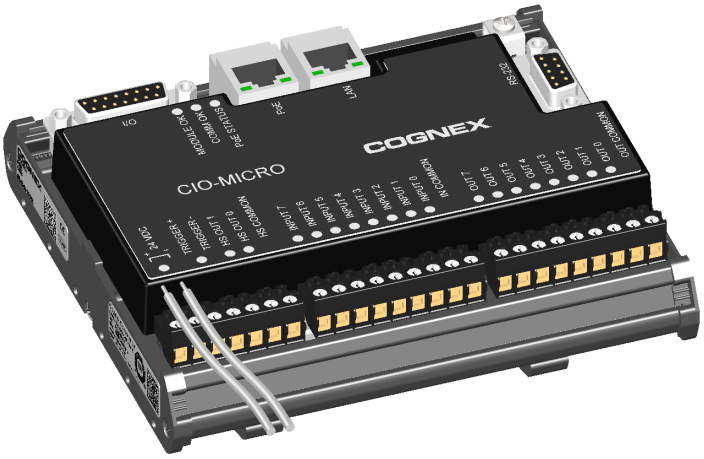

5. Connect a frame ground wire to the I/O module's Frame Ground terminal. Connect the other end of the frame ground wire to frame ground.

CAUTION: The shield ground connections of the RS-232 port, LAN port, PoE port, I/O port and Frame Ground terminal are internally connected. The system grounding is at a zero ground potential. This zero-ground potential extends through the cable and to peripheral equipment, such as a vision system or PLC. To ensure safe operating conditions, check ground connections to ensure that they meet a zero ground potential.

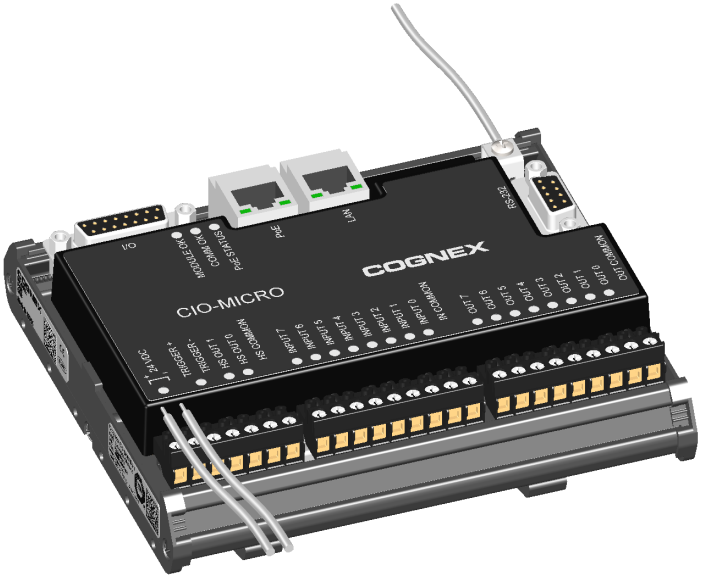

6. To connect the vision system to an Ethernet network, plug a LAN cable (RJ-45 connector) into the I/O module's LAN port and connect the other end of the cable to a switch/router or PC, as applicable.

Note: The CIO-MICRO I/O module does not support 1000 BaseT pass-through operation. If 1000 BaseT operation is required, you must connect an RJ-45 LAN cable from a Gigabit PoE switch to the I/O module's LAN port and connect the vision system's Ethernet cable to the Gigabit PoE switch.

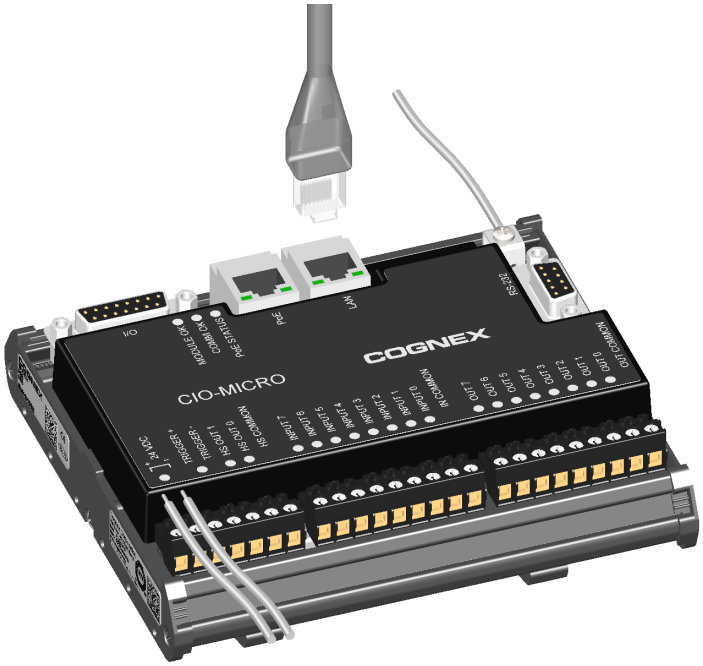

7. If installing the In-Sight 8405 vision system, attach the ferrite around the I/O Module cable, adjacent to the strain relief on the cable.

CAUTION: A ferrite is included with the In-Sight 8405vision system standard components. To reduce emissions, the ferrite must be attached to the I/O Module cable.

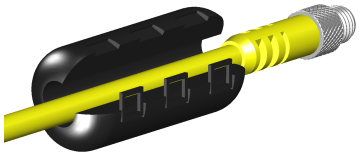

8. Connect the I/O Module cable's M8 connector to the vision system I/O connector.

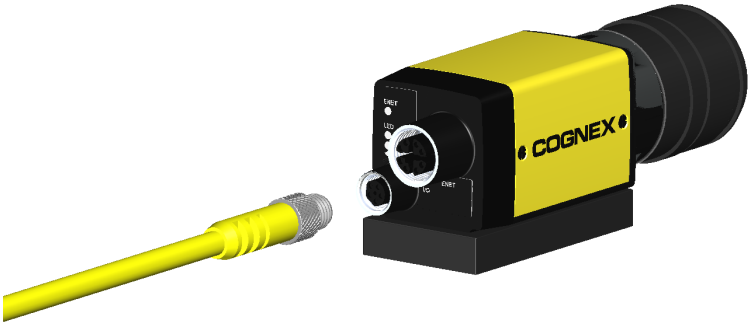

9. Connect the I/O Module cable’s DB15 connector to the I/O module’s I/O connector.

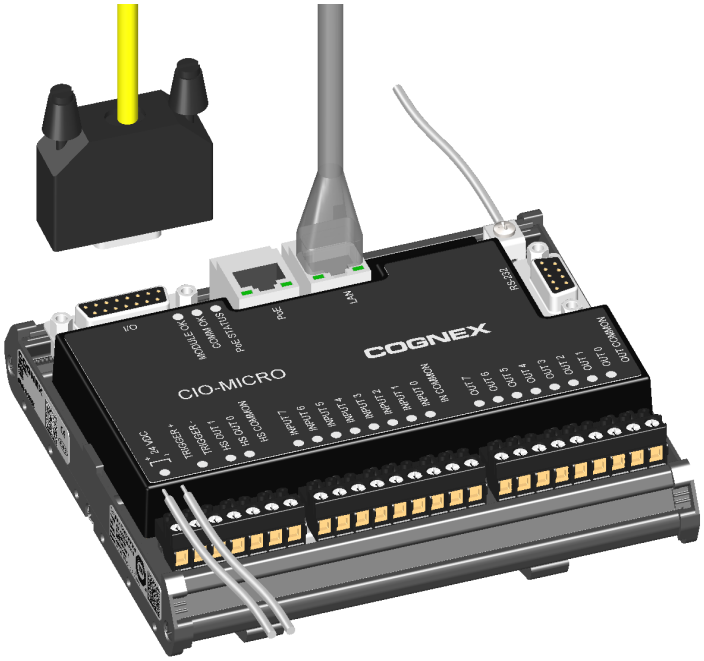

10. Connect the Ethernet cable's M12 connector to the vision system ENET connector.

CAUTION:

- The Ethernet cable must be shielded. For the In-Sight 8405 vision system, Cognex strongly recommends Cat 6 or Cat 7 Ethernet cables with S/STP shielding.
- The Ethernet cable shield must be grounded at the far end.

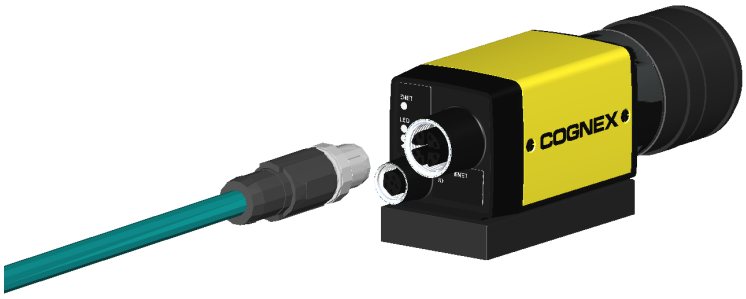

If installing the In-Sight 8405 vision system and using a compatible horizontal screw-locking Ethernet cable, use a screw driver to tighten the connector screws until snug. The screws must be tight to ensure a reliable connection.

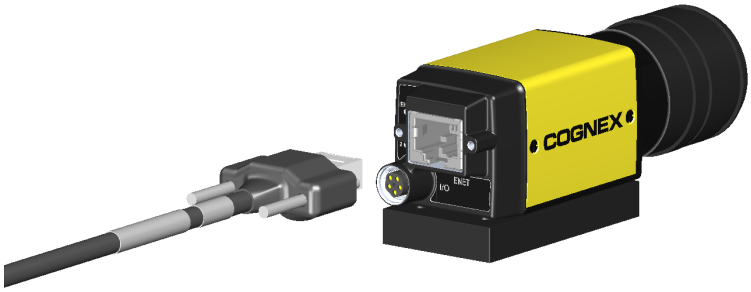

11. Connect the Ethernet cable's RJ-45 connector to the I/O module's PoE port.

CAUTION: The I/O module's PoE port provides power and Ethernet connectivity to the In-Sight 8100, 8200 or 8400 series vision system. If you connect third-party devices to the I/O module's PoE port, you could damage the I/O module.

Note: The In-Sight 8500 series vision system must be connected to a Class 0, 3 or 4 PoE power source, rated for at least 12.95 Watts. The CIO-MICRO I/O module is a Class 2 PoE device and therefore cannot be used to supply power to the In-Sight 8500 series vision system via the I/O module's PoE port. Instead, connect the In-Sight 8500 series vision system's Ethernet cable to a Class 0, 3 or 4 PoE power source and establish a connection to I/O module over the local area network using In-Sight Explorer. For more information, see *Connect the Ethernet Cable* on page 18.

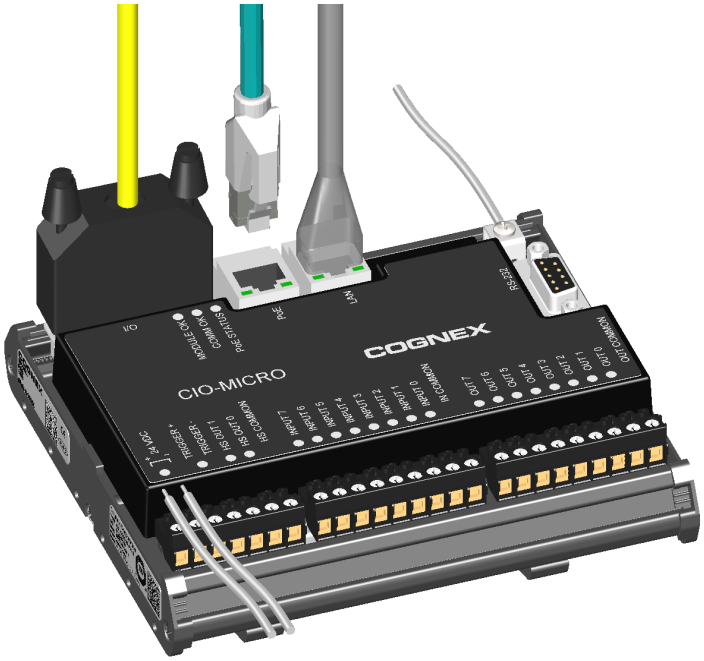

12. Restore power to the I/O module's 24VDC power supply and turn it on if necessary.

Specifications

The following sections list general specifications for the vision system.

8100 Series Vision System Specifications

Specifications	8100	8100C	8101	8101C
Minimum Firmware Requirement	In-Sight version 5.2.0	In-Sight version 5.5.0	In-Sight version 5.6.0	
Job/Program Memory	512MB non-volatile flash memory; unlimited storage via remote network device.			
Image Processing Memory	512MB SDRAM			
Sensor Type	1/1.8 inch CMOS, global shutter			
Sensor Properties	3.6mm diagonal, 4.5 x 4.5µm sq. pixels		7.38mm diagonal, 4.5 x 4.5µm sq. pixels	
Maximum Resolution (pixels)[1]	640 x 480		1280 x 1024	
Electronic Shutter Speed	14µs to 520ms		17.4µs to 750ms	
Acquisition	Rapid reset, progressive scan, full-frame integration.			
Bit Depth	256 grey levels (8 bits/pixel)	24-bit color	256 grey levels (8 bits/pixel)	24-bit color
Frames Per Second (FPS)[2]	217 FPS	135 FPS	76 FPS	45 FPS
Lens Type	C-Mount			
Trigger	1 opto-isolated, acquisition trigger input. Remote software commands via Ethernet. (RS-232C available when using the optional CIO-MICRO I/O module.)			
Discrete Inputs	None. (Eight additional general-purpose inputs available when using the optional CIO-MICRO I/O module.)			
Discrete Outputs	2 opto-isolated, NPN/PNP high-speed output lines. (Eight additional general-purpose outputs available when using the optional CIO-MICRO I/O module.)			
Status LEDs	Network, 2 user-configurable.			
Network Communication	1 Ethernet port, 10/100/1000 BaseT with auto MDIX. IEEE 802.3af or 802.3at TCP/IP Protocol. Supports DHCP (factory default), static and link-local IP address configuration.			
Serial Communication	None. (RS-232C: 4800 to 115,200 baud rates when connected to the optional CIO-MICRO I/O module.)			

[1] You can configure the number of image sensor rows and set them in the In-Sight Explorer software. If you decrease the number of rows, it increases the frames per second acquired by the vision system. Refer to the AcquireImage topic in the *In-Sight® Explorer Help* file for more information.

[2] Maximum frames per second are job-dependent, based on the minimum exposure for a full image frame capture using the dedicated acquisition trigger, and assumes there is no user interface connection to the vision system.

Specifications	8100	8100C	8101	8101C
Power	Class 2 Power over Ethernet (PoE) device. **Note**: The In-Sight 8100, 8200 and 8400 series vision system must be connected to a Class 0, 2, 3 or 4 PoE power source, rated for at least 6.49 Watts.			
Power Type	PoE Type A and Type B.			
Power Consumption	6.49 W maximum per Class 2 PoE.			
Current	Per Class 2 PoE requirements.			
Voltage	48VDC nominal, applied from a Class 2 PoE source, which is typically powered from some other voltage.			
Material	Die-cast zinc housing.			
Finish	Painted.			
Mounting	Four M3 threaded mounting holes (1/4-20 and M6 mounting holes also available on accessory BKT-IS8K-01 mounting bracket).			
Dimensions	31.0mm (1.22in) x 31.2mm (1.23in) x 75.1mm (2.96in).			
Weight	Vision system with no accessories attached: 132.2 g (4.66 oz.)			
Case Temperature[1]	0°C to 50°C (32°F to 122°F)			
Storage Temperature	-20°C to 80°C (-4°F to 176°F)			
Humidity	< 80% non-condensing			
Protection	IP40 with cables and lens attached.			
Shock (Shipping and Storage)	IEC 60068-2-27: 18 shocks (3 shocks in each polarity in each (X, Y, Z) axis) 80 Gs (800m/s^2 at 11ms, half-sinusoidal)			
Vibration (Shipping and Storage)	IEC 60068-2-6: vibration test in each of the three main axis for 2 hours @ 10 Gs (10 to 500 Hz at 100m/s^2 / 15mm)			
Regulations/Conformity	CE, FCC, KCC, TÜV SÜD NRTL, EU RoHS, China RoHS			

[1] To verify case temperature, use the EV GetSystemConfig("Internal.Temperature") Extended Native Mode command or GetSystemConfig ("Internal.Temperature") spreadsheet function. When issued, it returns the vision system's internal temperature in degrees Celsius, which is ±5 degrees above the vision system case temperature. Refer to the *In-Sight® Explorer Help* file for more information. Additional cooling measures are required if the case temperature cannot be kept below 50°C. Examples of such measures include: mounting the vision system to a heat sink using the M3 mounting screws, reducing the ambient temperature and ensuring there is air flow over the vision system.

8200 Series Vision System Specifications

Specifications	8200	8200C
Minimum Firmware Requirement	In-Sight version 5.2.0	In-Sight version 5.5.0
Job/Program Memory	512MB non-volatile flash memory; unlimited storage via remote network device.	
Image Processing Memory	512MB SDRAM	
Sensor Type	1/1.8 inch CMOS, global shutter	
Sensor Properties	3.6mm diagonal, 4.5 x 4.5µm sq. pixels	
Maximum Resolution (pixels)[1]	640 x 480	
Electronic Shutter Speed	14µs to 520ms	
Acquisition	Rapid reset, progressive scan, full-frame integration.	
Bit Depth	256 grey levels (8 bits/pixel)	24-bit color
Frames Per Second (FPS)[2]	217 FPS	135 FPS
Lens Type	C-Mount	
Trigger	1 opto-isolated, acquisition trigger input. Remote software commands via Ethernet. (RS-232C available when using the optional CIO-MICRO I/O module.)	
Discrete Inputs	None. (Eight additional general-purpose inputs available when using the optional CIO-MICRO I/O module.)	
Discrete Outputs	2 opto-isolated, NPN/PNP high-speed output lines. (Eight additional general-purpose outputs available when using the optional CIO-MICRO I/O module.)	
Status LEDs	Network, 2 user-configurable.	
Network Communication	1 Ethernet port, 10/100/1000 BaseT with auto MDIX. IEEE 802.3af or 802.3at TCP/IP Protocol. Supports DHCP (factory default), static and link-local IP address configuration.	
Serial Communication	None. (RS-232C: 4800 to 115,200 baud rates when connected to the optional CIO-MICRO I/O module.)	
Power	Class 2 Power over Ethernet (PoE) device. **Note**: The In-Sight 8100, 8200 and 8400 series vision system must be connected to a Class 0, 2, 3 or 4 PoE power source, rated for at least 6.49 Watts.	
Power Type	PoE Type A and Type B.	
Power Consumption	6.49 W maximum per Class 2 PoE.	
Current	Per Class 2 PoE requirements.	

[1] You can configure the number of image sensor rows and set them in the In-Sight Explorer software. If you decrease the number of rows, it increases the frames per second acquired by the vision system. Refer to the AcquireImage topic in the *In-Sight® Explorer Help* file for more information.

[2] Maximum frames per second are job-dependent, based on the minimum exposure for a full image frame capture using the dedicated acquisition trigger, and assumes there is no user interface connection to the vision system.

Specifications	8200	8200C
Voltage	48VDC nominal, applied from a Class 2 PoE source, which is typically powered from some other voltage.	
Material	Die-cast zinc housing.	
Finish	Painted.	
Mounting	Four M3 threaded mounting holes (1/4-20 and M6 mounting holes also available on accessory BKT-IS8K-01 mounting bracket).	
Dimensions	31.0mm (1.22in) x 31.2mm (1.23in) x 75.1mm (2.96in).	
Weight	Vision system with no accessories attached: 132.2 g (4.66 oz.)	
Case Temperature[1]	0°C to 50°C (32°F to 122°F)	
Storage Temperature	-20°C to 80°C (-4°F to 176°F)	
Humidity	< 80% non-condensing	
Protection	IP40 with cables and lens attached.	
Shock (Shipping and Storage)	IEC 60068-2-27: 18 shocks (3 shocks in each polarity in each (X, Y, Z) axis) 80 Gs (800m/s^2 at 11ms, half-sinusoidal)	
Vibration (Shipping and Storage)	IEC 60068-2-6: vibration test in each of the three main axis for 2 hours @ 10 Gs (10 to 500 Hz at 100m/s^2 / 15mm)	
Regulations/Conformity	CE, FCC, KCC, TÜV SÜD NRTL, EU RoHS, China RoHS	

[1] To verify case temperature, use the EV GetSystemConfig("Internal.Temperature") Extended Native Mode command or GetSystemConfig ("Internal.Temperature") spreadsheet function. When issued, it returns the vision system's internal temperature in degrees Celsius, which is ±5 degrees above the vision system case temperature. Refer to the *In-Sight® Explorer Help* file for more information. Additional cooling measures are required if the case temperature cannot be kept below 50°C. Examples of such measures include: mounting the vision system to a heat sink using the M3 mounting screws, reducing the ambient temperature and ensuring there is air flow over the vision system.

8400, 8401 & 8402 Vision System Specifications

Specifications	8400	8400C	8401	8401C	8402	8402C
Minimum Firmware Requirement	In-Sight version 5.2.0	In-Sight version 5.5.0	In-Sight version 5.2.0	In-Sight version 5.5.0	In-Sight version 5.2.0	In-Sight version 5.5.0
Job/Program Memory	512MB non-volatile flash memory; unlimited storage via remote network device.					
Image Processing Memory	512MB SDRAM					
Sensor Type	1/1.8 inch CMOS, global shutter					
Sensor Properties	3.6mm diagonal, 4.5 x 4.5µm sq. pixels		7.38mm diagonal, 4.5 x 4.5µm sq. pixels		9mm diagonal, 4.5 x 4.5µm sq. pixels	
Maximum Resolution (pixels)[1]	640 x 480		1280 x 1024		1600 x 1200	
Electronic Shutter Speed	14µs to 520ms		17.4µs to 750ms		20µs to 940ms	
Acquisition	Rapid reset, progressive scan, full-frame integration.					
Bit Depth	256 grey levels (8 bits/pixel)	24-bit color	256 grey levels (8 bits/pixel)	24-bit color	256 grey levels (8 bits/pixel)	24-bit color
Frames Per Second (FPS)[2]	217 FPS	135 FPS	76 FPS	45 FPS	53 FPS	33 FPS
Lens Type	C-Mount					
Trigger	1 opto-isolated, acquisition trigger input. Remote software commands via Ethernet. (RS-232C available when using the optional CIO-MICRO I/O module.)					
Discrete Inputs	None. (Eight additional general-purpose inputs available when using the optional CIO-MICRO I/O module.)					
Discrete Outputs	2 opto-isolated, NPN/PNP high-speed output lines. (Eight additional general-purpose outputs available when using the optional CIO-MICRO I/O module.)					
Status LEDs	Network, 2 user-configurable.					
Network Communication	1 Ethernet port, 10/100/1000 BaseT with auto MDIX. IEEE 802.3af or 802.3at TCP/IP Protocol. Supports DHCP (factory default), static and link-local IP address configuration.					
Serial Communication	None. (RS-232C: 4800 to 115,200 baud rates when connected to the optional CIO-MICRO I/O module.)					
Power	Class 2 Power over Ethernet (PoE) device. **Note**: The In-Sight 8100, 8200 and 8400 series vision system must be connected to a Class 0, 2, 3 or 4 PoE power source, rated for at least 6.49 Watts.					
Power Type	PoE Type A and Type B.					

[1] You can configure the number of image sensor rows and set them in the In-Sight Explorer software. If you decrease the number of rows, it increases the frames per second acquired by the vision system. Refer to the AcquireImage topic in the *In-Sight® Explorer Help* file for more information.

[2] Maximum frames per second are job-dependent, based on the minimum exposure for a full image frame capture using the dedicated acquisition trigger, and assumes there is no user interface connection to the vision system.

Specifications	8400	8400C	8401	8401C	8402	8402C
Power Consumption	6.49 W maximum per Class 2 PoE.					
Current	Per Class 2 PoE requirements.					
Voltage	48VDC nominal, applied from a Class 2 PoE source, which is typically powered from some other voltage.					
Material	Die-cast zinc housing.					
Finish	Painted.					
Mounting	Four M3 threaded mounting holes (1/4-20 and M6 mounting holes also available on accessory BKT-IS8K-01 mounting bracket).					
Dimensions	31.0mm (1.22in) x 31.2mm (1.23in) x 75.1mm (2.96in).					
Weight	Vision system with no accessories attached: 132.2 g (4.66 oz.)					
Case Temperature[1]	0°C to 50°C (32°F to 122°F)					
Storage Temperature	-20°C to 80°C (-4°F to 176°F)					
Humidity	< 80% non-condensing					
Protection	IP40 with cables and lens attached.					
Shock (Shipping and Storage)	IEC 60068-2-27: 18 shocks (3 shocks in each polarity in each (X, Y, Z) axis) 80 Gs (800m/s^2 at 11ms, half-sinusoidal)					
Vibration (Shipping and Storage)	IEC 60068-2-6: vibration test in each of the three main axis for 2 hours @ 10 Gs (10 to 500 Hz at 100m/s^2 / 15mm)					
Regulations/Conformity	CE, FCC, KCC, TÜV SÜD NRTL, EU RoHS, China RoHS					

[1] To verify case temperature, use the EV GetSystemConfig("Internal.Temperature") Extended Native Mode command or GetSystemConfig ("Internal.Temperature") spreadsheet function. When issued, it returns the vision system's internal temperature in degrees Celsius, which is ±5 degrees above the vision system case temperature. Refer to the *In-Sight® Explorer Help* file for more information.Additional cooling measures are required if the case temperature cannot be kept below 50°C. Examples of such measures include: mounting the vision system to a heat sink using the M3 mounting screws, reducing the ambient temperature and ensuring there is air flow over the vision system.

8405 Vision System Specifications

Specifications	8405
Minimum Firmware Requirement	In-Sight version 5.1.1
Job/Program Memory	512MB non-volatile flash memory; unlimited storage via remote network device.
Image Processing Memory	512MB SDRAM
Sensor Type	1/2.5 inch CMOS, rolling shutter
Sensor Properties	7.13mm diagonal, 2.2 x 2.2µm sq. pixels
Maximum Resolution (pixels)[1]	2592 x 1944
Electronic Shutter Speed	32µs to 1000ms
Acquisition	Rapid reset, progressive scan, full-frame integration.
Bit Depth	256 grey levels (8 bits/pixel)
Frames Per Second (FPS)[2]	13 FPS
Lens Type	C-Mount
Trigger	1 opto-isolated, acquisition trigger input. Remote software commands via Ethernet. (RS-232C available when using the optional CIO-MICRO I/O module.)
Discrete Inputs	None. (Eight additional general-purpose inputs available when using the optional CIO-MICRO I/O module.)
Discrete Outputs	2 opto-isolated, NPN/PNP high-speed output lines. (Eight additional general-purpose outputs available when using the optional CIO-MICRO I/O module.)
Status LEDs	Network, 2 user-configurable.
Network Communication	1 Ethernet port, 10/100/1000 BaseT with auto MDIX. IEEE 802.3af or 802.3at TCP/IP Protocol. Supports DHCP (factory default), static and link-local IP address configuration.
Serial Communication	None. (RS-232C: 4800 to 115,200 baud rates when connected to the optional CIO-MICRO I/O module.)
Power	Class 2 Power over Ethernet (PoE) device. **Note**: The In-Sight 8100, 8200 and 8400 series vision system must be connected to a Class 0, 2, 3 or 4 PoE power source, rated for at least 6.49 Watts.
Power Type	PoE Type A and Type B.
Power Consumption	6.49 W maximum per Class 2 PoE.
Current	Per Class 2 PoE requirements.

[1] You can configure the number of image sensor rows and set them in the In-Sight Explorer software. If you decrease the number of rows, it increases the frames per second acquired by the vision system. Refer to the AcquireImage topic in the *In-Sight® Explorer Help* file for more information.

[2] Maximum frames per second are job-dependent, based on the minimum exposure for a full image frame capture using the dedicated acquisition trigger, and assumes there is no user interface connection to the vision system.

Specifications	8405
Voltage	48VDC nominal, applied from a Class 2 PoE source, which is typically powered from some other voltage.
Material	Die-cast zinc housing.
Finish	Painted.
Mounting	Four M3 threaded mounting holes (1/4-20 and M6 mounting holes also available on accessory BKT-IS8K-01 mounting bracket).
Dimensions	31.0mm (1.22in) x 31.2mm (1.23in) x 71.6mm (2.82in).
Weight	Vision system with no accessories attached: 78 g (2.75 oz.)
Case Temperature[1]	0°C to 50°C (32°F to 122°F)
Storage Temperature	-20°C to 80°C (-4°F to 176°F)
Humidity	< 80% non-condensing
Protection	IP30 with cables and lens attached.
Shock (Shipping and Storage)	IEC 60068-2-27: 18 shocks (3 shocks in each polarity in each (X, Y, Z) axis) 80 Gs (800m/s^2 at 11ms, half-sinusoidal)
Vibration (Shipping and Storage)	IEC 60068-2-6: vibration test in each of the three main axis for 2 hours @ 10 Gs (10 to 500 Hz at 100m/s^2 / 15mm)
Regulations/Conformity	CE, FCC, KCC, TÜV SÜD NRTL, EU RoHS, China RoHS

[1] To verify case temperature, use the EV GetSystemConfig("Internal.Temperature") Extended Native Mode command or GetSystemConfig ("Internal.Temperature") spreadsheet function. When issued, it returns the vision system's internal temperature in degrees Celsius, which is ±5 degrees above the vision system case temperature. Refer to the *In-Sight® Explorer Help* file for more information.Additional cooling measures are required if the case temperature cannot be kept below 50°C. Examples of such measures include: mounting the vision system to a heat sink using the M3 mounting screws, reducing the ambient temperature and ensuring there is air flow over the vision system.

8500 Series Vision System Specifications

Specifications	8500P	8501P	8502P	8502CP	8505P	8505CP
Minimum Firmware Requirement	In-Sight 5.9.2				In-Sight 5.9.0	In-Sight 5.9.2
Job/Program Memory	14.8GB non-volatile flash memory. Unlimited storage via remote network device.					
Image Processing Memory	512MB SDRAM					
Sensor Type	2/3-inch CMOS, global shutter					
Sensor Properties	800 x 600: 3.45mm diagonal, 3.45 x 3.45µm sq. pixels 640 x 480: 2.76mm diagonal, 3.45 x 3.45µm sq. pixels	5.65mm diagonal, 3.45 x 3.45µm sq. pixels	7.8mm diagonal, 3.45 x 3.45µm sq. pixels		11.1mm diagonal, 3.45 x 3.45µm sq. pixels	
Maximum Resolution (pixels)[1]	800 x 600 [2] 640 x 480	1280 x 1024	1920 x 1200		2448 x 2048	
Electronic Shutter Speed	21µs to 1000ms					
Acquisition	High Dynamic Range (HDR+) available. Rapid reset, progressive scan, full-frame integration.		High Dynamic Range (HDR+) available. Rapid reset, progressive scan, full-frame integration.	Rapid reset, progressive scan, full-frame integration.	Rapid reset, progressive scan, full-frame integration. High Dynamic Range (HDR+) available.	Rapid reset, progressive scan, full-frame integration.
Bit Depth	256 grey levels (8 bits/pixel)			24-bit color	256 grey levels (8 bits/pixel)	24-bit color
Frames Per Second (FPS)[3]	800 x 600: 108 FPS 640 x 480: 133 FPS	66 FPS	55 FPS	35 FPS	32 FPS	17 FPS
Lens Type	C-Mount					

[1] You can configure the number of image sensor rows and set them in the In-Sight Explorer software. If you decrease the number of rows, it increases the frames per second acquired by the vision system. Refer to the AcquireImage topic in the *In-Sight® Explorer Help* file for more information.

[2] The default resolution is 800 x 600 pixels. The resolution can be configured as 640 x 480 pixels within the In-Sight Explorer software.

[3] Maximum frames per second are job-dependent, based on the minimum exposure for a full image frame capture using the dedicated acquisition trigger, and assumes there is no user interface connection to the vision system.

Specifications	8500P	8501P	8502P	8502CP	8505P	8505CP
Trigger	1 opto-isolated, acquisition trigger input. Remote software commands via Ethernet. (RS-232C available when using the optional CIO-MICRO I/O module.)					
Discrete Inputs	None. (Eight additional general-purpose inputs available when using the optional CIO-MICRO I/O module.)					
Discrete Outputs	2 opto-isolated, NPN/PNP high-speed output lines. (Eight additional general-purpose outputs available when using the optional CIO-MICRO I/O module.)					
Status LEDs	Network, 2 user-configurable.					
Network Communication	1 Ethernet port, 10/100/1000 BaseT with auto MDIX. IEEE 802.3af or 802.3at TCP/IP Protocol.Supports DHCP (factory default), static and link-local IP address configuration.					
Serial Communication	None. (RS-232C: 4800 to 115,200 baud rates when connected to the optional CIO-MICRO I/O module.)					
Power	Class 3 Power over Ethernet (PoE) device. **Note**: The In-Sight 8500 series vision system must be connected to a Class 0, 3 or 4 PoE power source, rated for at least 12.95 Watts. The CIO-MICRO I/O module is a Class 2 PoE device and therefore cannot be used to supply power to the In-Sight 8500 series vision system via the I/O module's PoE port.					
Power Type	PoE Type A and Type B.					
Power Consumption	12.95 W maximum per Class 3 PoE.					
Current	Per Class 3 PoE requirements.					
Voltage	48VDC nominal, applied from a Class 3 PoE source, which is typically powered from some other voltage.					
Material	Die-cast zinc housing.					
Finish	Painted.					
Mounting	Four M3 threaded mounting holes (1/4-20 and M6 mounting holes also available on accessory BKT-IS8K-01 mounting bracket).					
Dimensions	35.0mm (1.38in) x 32.0mm (1.26in) x 75.55mm (2.97in).					
Weight	Vision system with no accessories attached: 192g (6.77 oz.)					
Case Temperature[1]	0°C to 60°C (32°F to 140°F)					
Storage Temperature	-20°C to 80°C (-4°F to 176°F)					
Humidity	< 80% non-condensing					
Protection	IP40 with cables and lens attached.					
Shock (Shipping and Storage)	IEC 60068-2-27: 18 shocks (3 shocks in each polarity in each (X, Y, Z) axis) 80 Gs (800m/s^2 at 11ms, half-sinusoidal)					
Vibration (Shipping and Storage)	IEC 60068-2-6: vibration test in each of the three main axis for 2 hours @ 10 Gs (10 to 500 Hz at 100m/s^2 / 15mm)					
Regulations/Conformity	CE, FCC, KCC, TÜV SÜD NRTL, EU RoHS, China RoHS					

[1] To verify case temperature, use the EV GetSystemConfig("Internal.Temperature") Extended Native Mode command or GetSystemConfig ("Internal.Temperature") spreadsheet function. When issued, it returns the vision system's internal temperature in degrees Celsius, which is ~3 degrees above the vision system case temperature. Refer to the *In-Sight® Explorer Help* file for more information. Additional cooling measures are required if the case temperature cannot be kept below 60°C. Examples of such measures include: mounting the vision system to a heat sink using the M3 mounting screws, reducing the ambient temperature and ensuring there is air flow over the vision system.

Acquisition Trigger Input

The vision system features one acquisition trigger input, which is optically isolated. You can configure the acquisition trigger input to trigger from an NPN (current sinking) or PNP (current sourcing) device.

Specification		Description
Voltage	ON: 20 to 28VDC (24VDC nominal) OFF: 0 to 3VDC (8VDC nominal threshold)	
Current	ON: 1.9 to 3.0mA from 20 to 28V input. OFF: < 300µA for <3VDC input. Resistance: ~10 kOhms	
Delay[1]	In-Sight 8100, 8200 and 8400 series	72µs maximum latency between leading edge of trigger and start of acquisition. Input pulse should be minimum of 1ms wide.
	In-Sight 8500 series	135µs maximum latency between leading edge of trigger and start of acquisition. Input pulse should be minimum of 1ms wide.

- The Breakout cable can be used to trigger from an NPN photoelectric sensor or PLC output. Connect TRIGGER+ to +24VDC and connect TRIGGER- to the output of the photoelectric sensor. When the output turns ON, it pulls TRIGGER- down to 0VDC, turning the opto-coupler ON. For more information, refer to *Breakout Cable* on page 38.
- The Breakout cable can also be used to trigger from a PNP photoelectric sensor or PLC output. Connect TRIGGER+ to the output of the photoelectric sensor and connect TRIGGER- to 0VDC. When the output turns ON, it pulls TRIGGER+ up to +24VDC, turning the opto-coupler ON. For more information, refer to *Breakout Cable* on page 38.

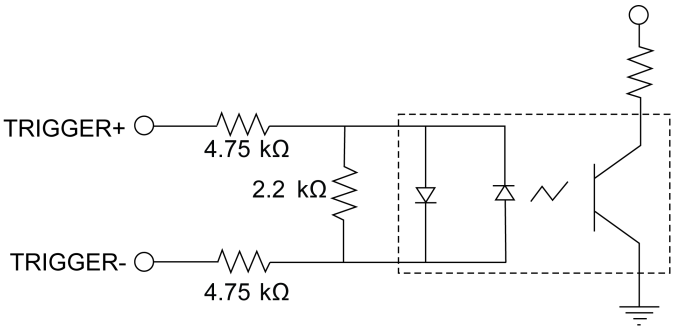

28VDC Max. Across input pins - Transition approx. 8VDC (Nom.)

[1] Maximum latency is based on a 1µs trigger debounce.

High-Speed Outputs

The vision system features two built-in, high-speed outputs, which are optically isolated. The high-speed outputs can be used as either NPN (current sinking) or PNP (current sourcing) lines.

Specification	Description
Voltage	28VDC maximum through external load.
Current	100mA maximum sink current.
	OFF state leakage current 100µA maximum.
	External load resistance 240 Ohms to 10 kOhms.
	Maximum 100mA, protected against over-current, short circuit and transients from switching inductive loads. High current inductive loads require an external protection diode.
Delay[1]	30µs (maximum due to opto-isolators turning ON).

For NPN lines, the external load should be connected between the output and the positive supply voltage (+24VDC nominal). HS COMMON should be connected to the negative supply voltage (0VDC). The outputs pull down to less than 3VDC when ON, which causes current to flow through the load. When the outputs are OFF, no current flows through the load.

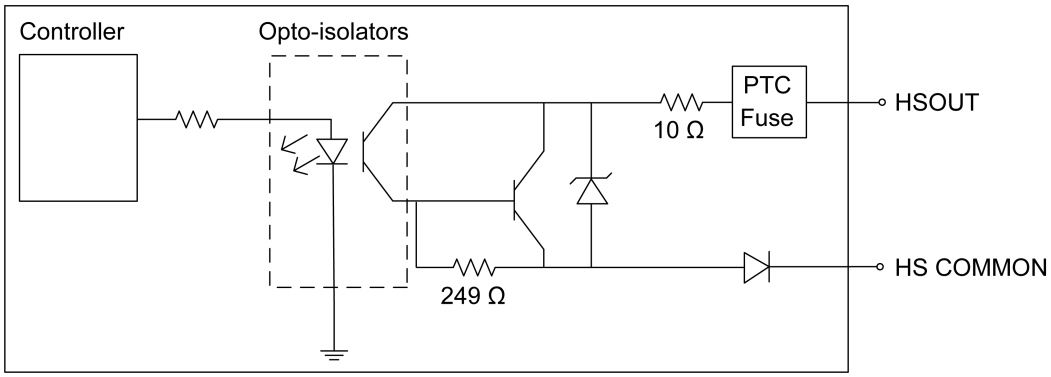

For PNP lines, the external load should be connected between the output and the negative supply voltage (0VDC). When HS COMMON is connected to the positive supply voltage (+24VDC nominal), the outputs pull up to greater than 21VDC when ON, and current flows through the load. When the outputs are OFF, no current flows through the load.

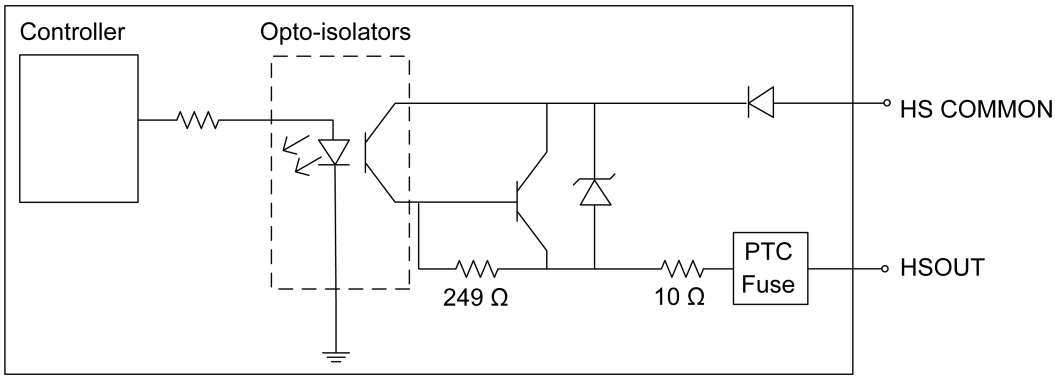

[1] Delay when opto-isolators turn OFF depends on the load to which the output is connected. With a 240 Ohm load, the maximum delay will be 35µs.

High-Speed Output - NPN Configuration

The Breakout cable can be used to connect to an NPN-compatible PLC input. Connect HSOUT 0 or HSOUT 1 directly to the PLC input. When enabled, the output pulls the PLC input down to less than 3VDC. For more information, refer to *Breakout Cable* on page 38.

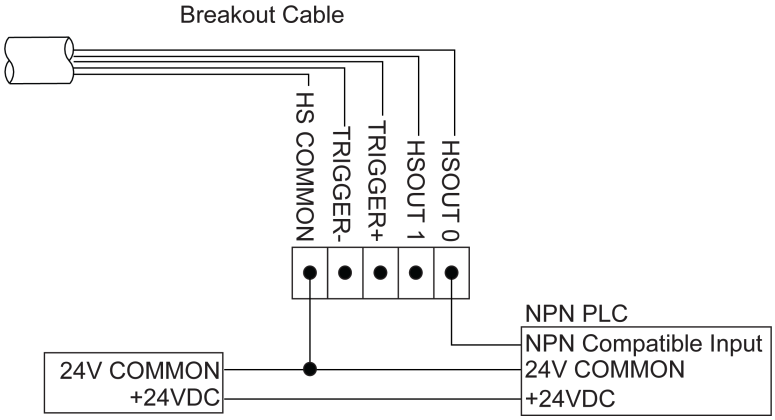

High-Speed Output - PNP Configuration

The Breakout cable can be used to connect to a PNP-compatible PLC input. Connect HSOUT 0 or HSOUT 1 directly to the PLC input. When enabled, the output pulls the PLC input up to greater than 21VDC. For more information, refer to *Breakout Cable* on page 38.

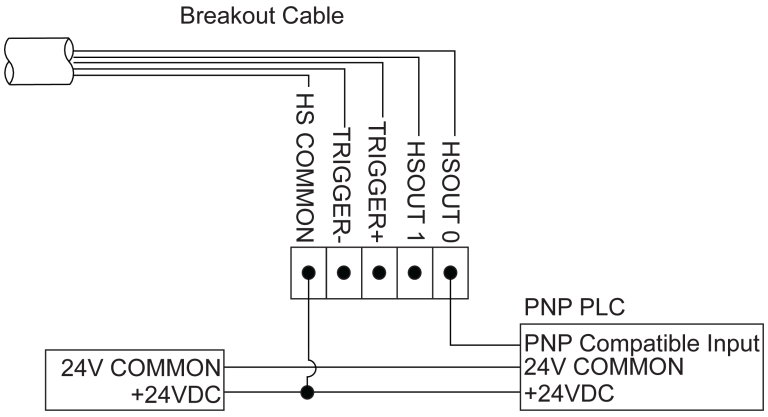

High-Speed Output - Relay/LED Configuration

The Breakout cable can be used to connect the high-speed outputs to a relay, LED or similar load. Connect the negative side of the load to the output and the positive side to +24VDC. When the output switches on, the negative side of the load is pulled down to less than 3VDC, and greater than 21VDC appears across the load. Use a protection diode for a large inductive load, with the anode connected to the output and the cathode connected to +24VDC. For more information, refer to *Breakout Cable* on page 38.

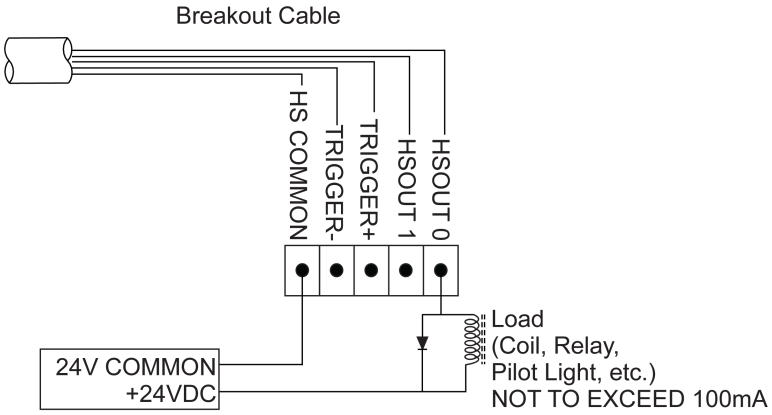

Breakout Cable

The Breakout cable provides access to the vision system's trigger and high-speed outputs. The Breakout cable can be connected to devices, such as a PLC, trigger sensor or strobe light. The Breakout cable is not terminated.

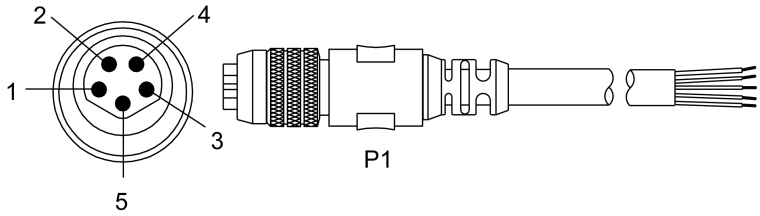

P1 Pin Number	Signal Name	Wire Color
1	HSOUT 0	Brown
2	HSOUT 1	White
3	TRIGGER+	Blue
4	TRIGGER-	Black
5	HS COMMON	Gray

Note:

- Cables are sold separately.
- I/O wiring or adjustments to I/O devices should be performed when the vision system is not receiving power.
- You can clip unused wires short or use a tie made of non-conductive material to tie them back.

I/O Module Cable

The I/O Module cable is used with the CIO-MICRO. The I/O Module cable connects the vision system directly to the I/O module via the DB15 connector. When connected, the I/O Module cable provides access to the vision system's trigger and high-speed outputs.

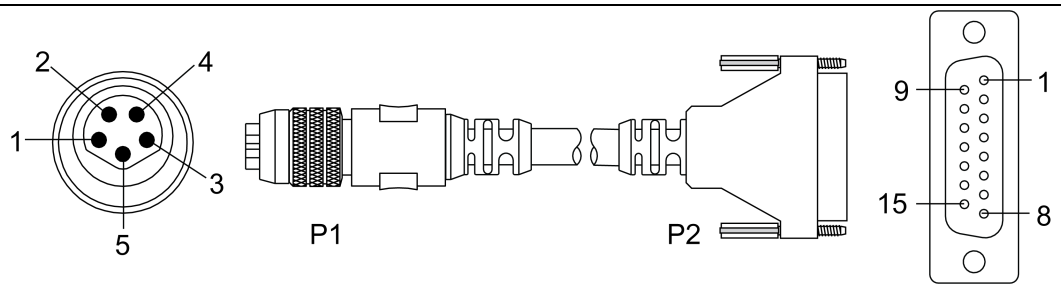

P1 Pin Number	Signal Name	P2 Pin Number
1	HSOUT 0	4
2	HSOUT 1	5
3	TRIGGER+	2
4	TRIGGER-	3
5	HS COMMON	15

Note:

- Cables are sold separately.
- The CIO-MICRO I/O module supports In-Sight 8000 series vision systems with firmware version 5.3.0 and higher.

Ethernet Cable (CCB-84901-2xxx-xx)

The Ethernet cable provides Ethernet connectivity and supplies power to the vision system.

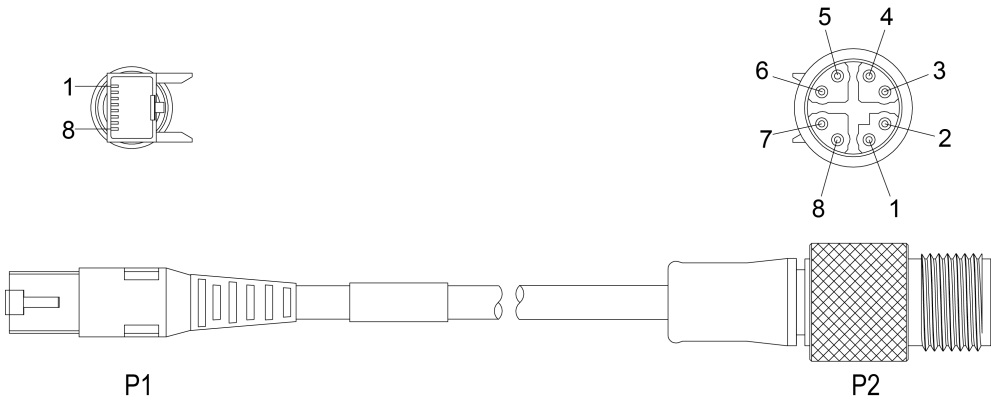

P1 Pin Number	Wire Color	Signal Name	P2 Pin Number
1	White/Orange	TxRx A +	1
2	Orange	TxRx A -	2
3	White/Green	TxRx B +	3
4	Blue	TxRx C +	8
5	White/Blue	TxRx C -	7
6	Green	TxRx B -	4
7	White/Brown	TxRx D +	5
8	Brown	TxRx D -	6

Note:

- Cables are sold separately.
- The wiring for this cable follows standard industrial Ethernet M12 specifications. It differs from the 568B standard.

CAUTION: The Ethernet cable shield must be grounded at the far end. If using a PoE injector, a ground wire should be connected from the Ethernet shield at the PoE injector to frame ground or Earth ground, and a digital voltmeter used to validate the grounding. If using a PoE switch, it should have a metal case, with the case grounded to frame ground or Earth ground.

Ethernet Cable (CGE-CBL-SHLD-xM)

The Ethernet cable provides Ethernet connectivity and supplies power to the vision system.

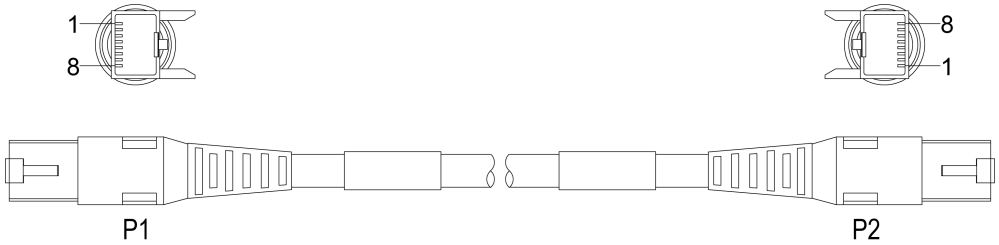

P1 Pin Number	Wire Color	Signal Name	P2 Pin Number
1	White/Orange	TxRx A +	1
2	Orange	TxRx A -	2
3	White/Green	TxRx B +	3
4	Blue	TxRx C +	4
5	White/Blue	TxRx C -	5
6	Green	TxRx B -	6
7	White/Brown	TxRx D +	7
8	Brown	TxRx D -	8

Note:

- Cables are sold separately.
- This cable is only supported with the In-Sight 8405 vision system.

CAUTION:

- The Ethernet cable must be shielded. For the In-Sight 8405 vision system, Cognex strongly recommends Cat 6 or Cat 7 Ethernet cables with S/STP shielding.
- The Ethernet cable shield must be grounded at the far end. If using a PoE injector, a ground wire should be connected from the Ethernet shield at the PoE injector to frame ground or Earth ground, and a digital voltmeter used to validate the grounding. If using a PoE switch, it should have a metal case, with the case grounded to frame ground or Earth ground.

Dimensions

The following sections list dimensions of the vision system and optional accessories.

8100 Series, 8200 Series, 8400, 8401 & 8402 Vision System

Note:

- Dimensions are in millimeters [inches] and are for reference purposes only.
- All specifications are for reference purposes only and can change without notice.

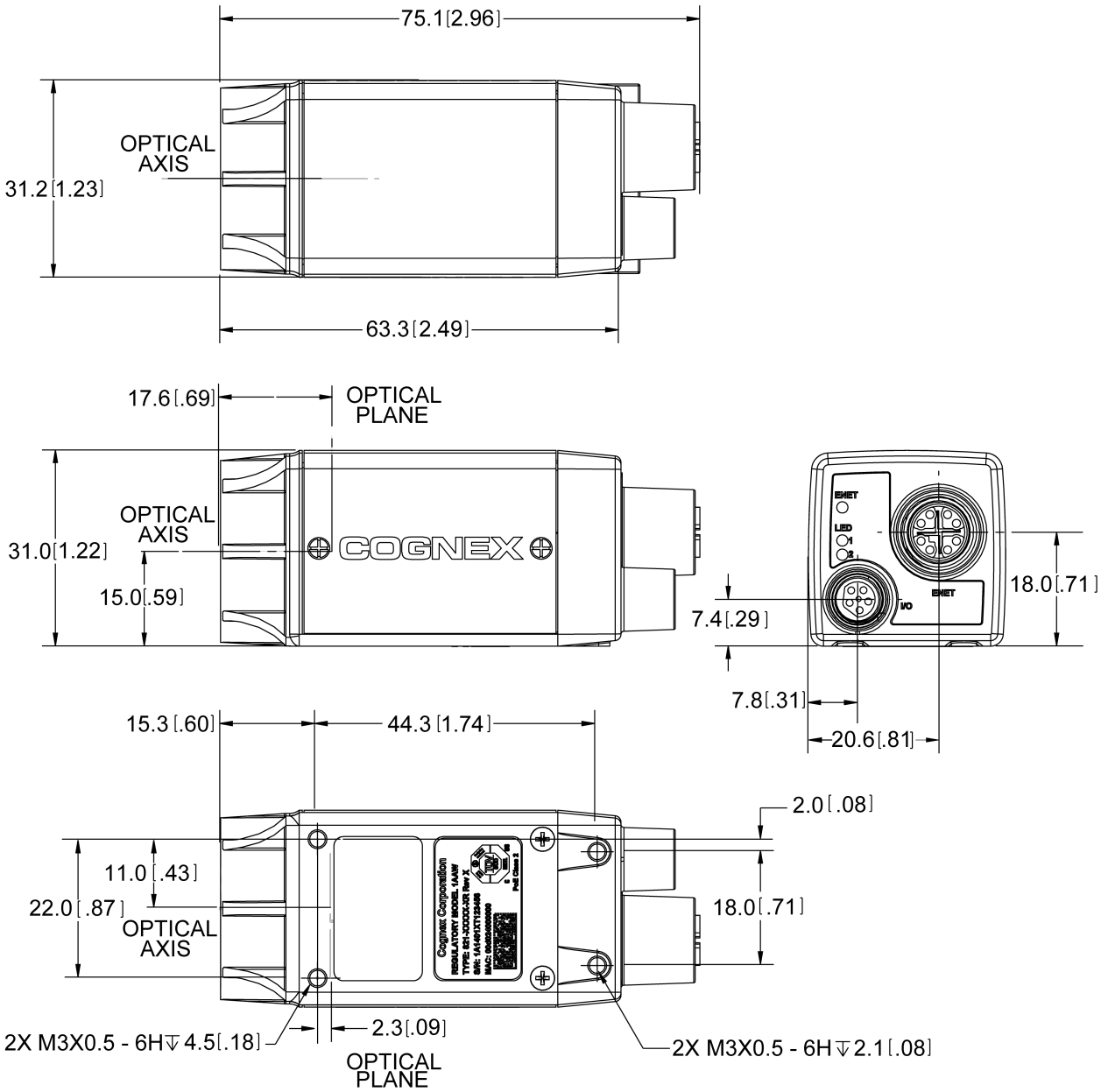

8405 Vision System

Note:

- Dimensions are in millimeters [inches] and are for reference purposes only.
- All specifications are for reference purposes only and can change without notice.

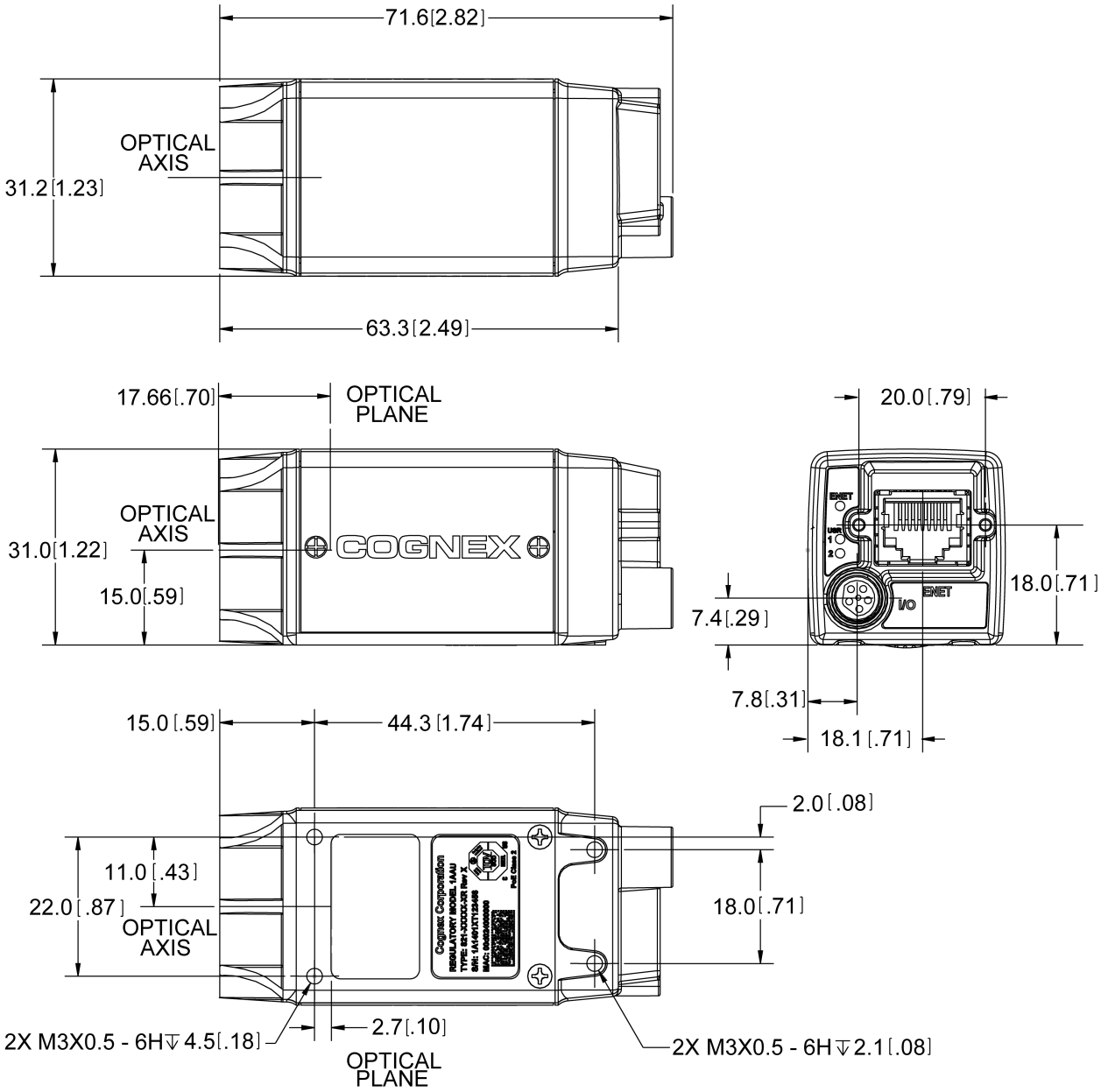

8500 Series Vision System

Note:

- Dimensions are in millimeters [inches] and are for reference purposes only.
- All specifications are for reference purposes only and can change without notice.

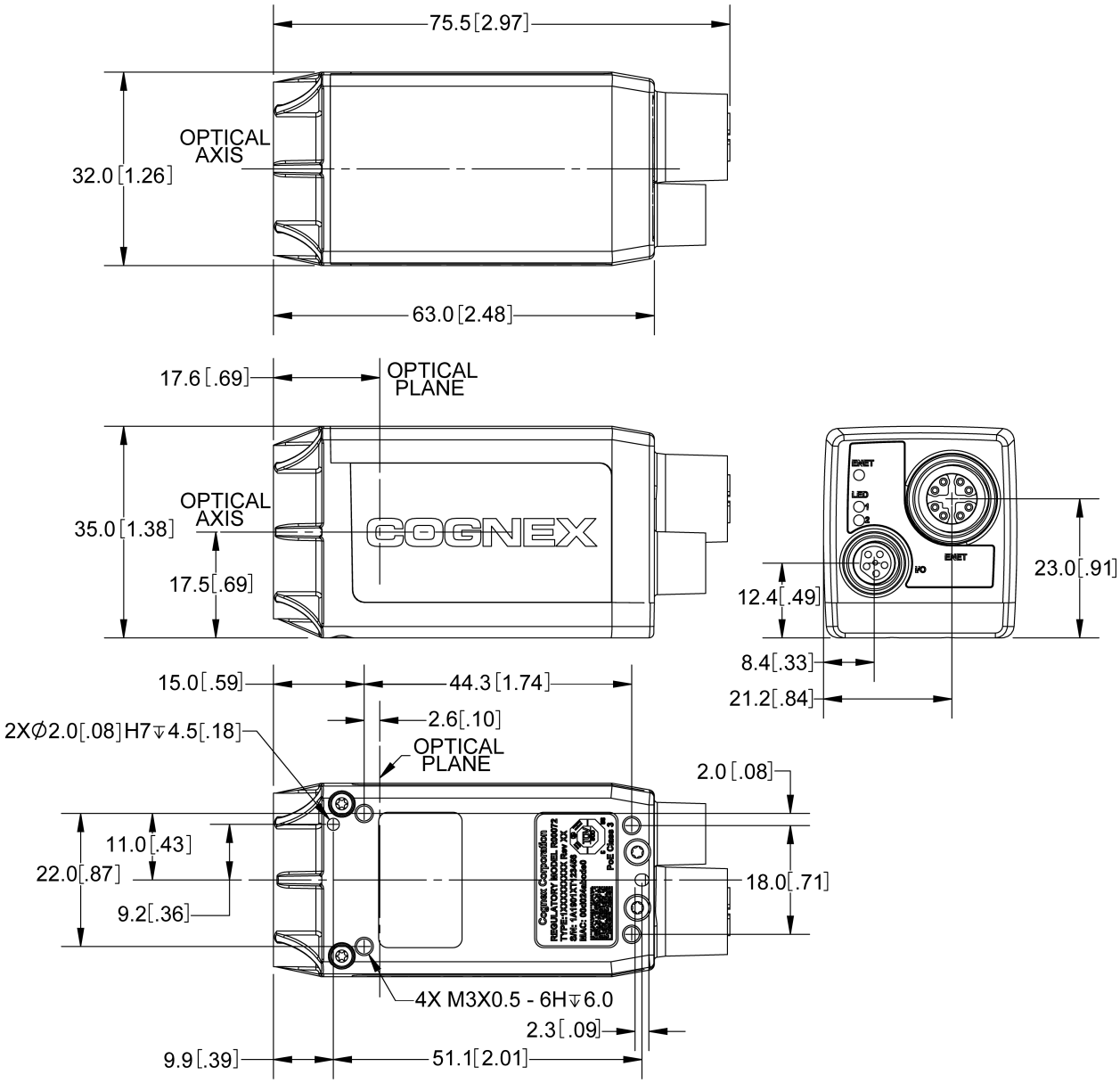

Mounting Bracket (BKT-IS8K-01)

Note:

- Dimensions are in millimeters [inches] and are for reference purposes only.
- All specifications are for reference purposes only and can change without notice.

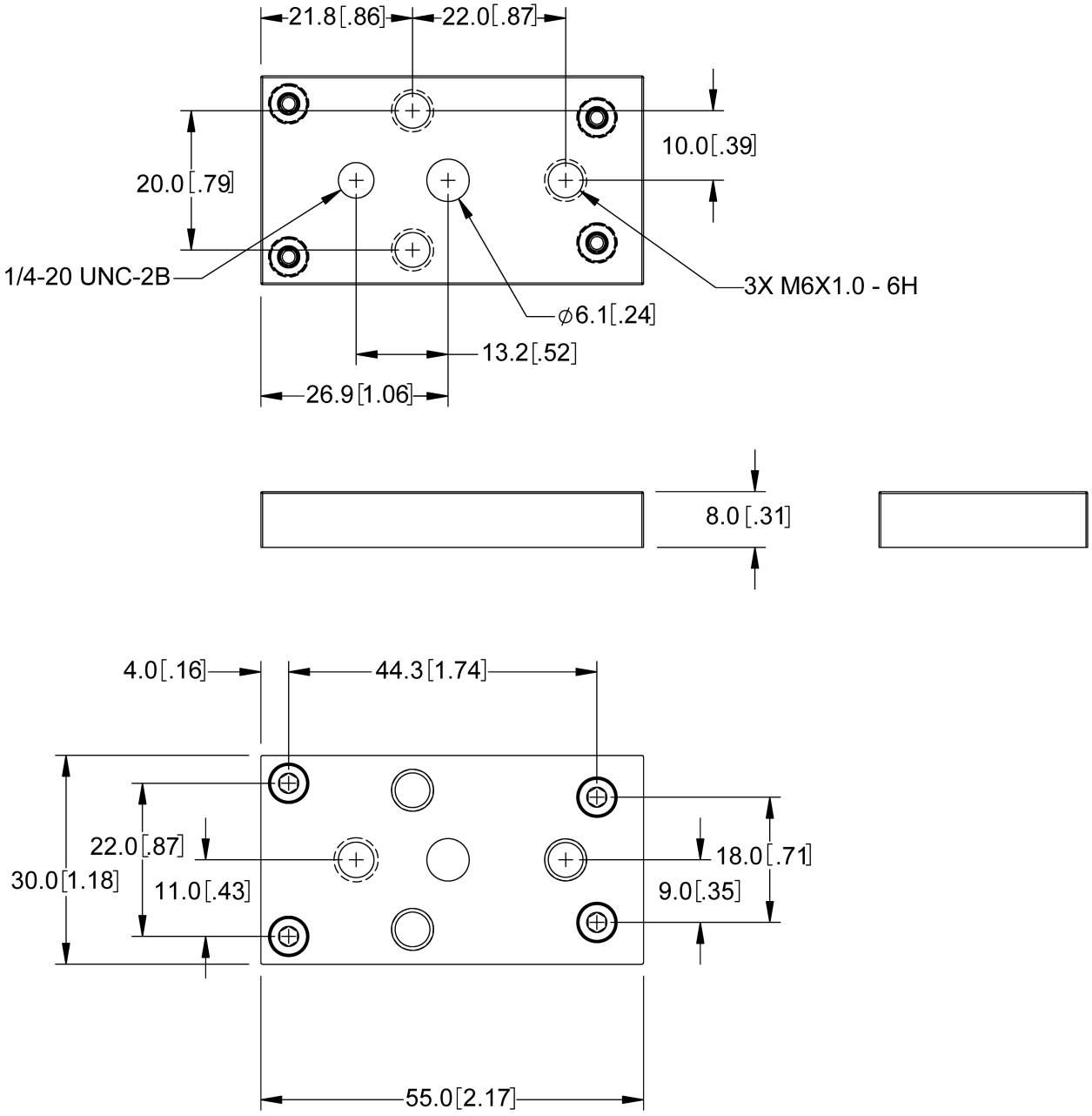

Mounting Bracket (BKT-IS8K-02)

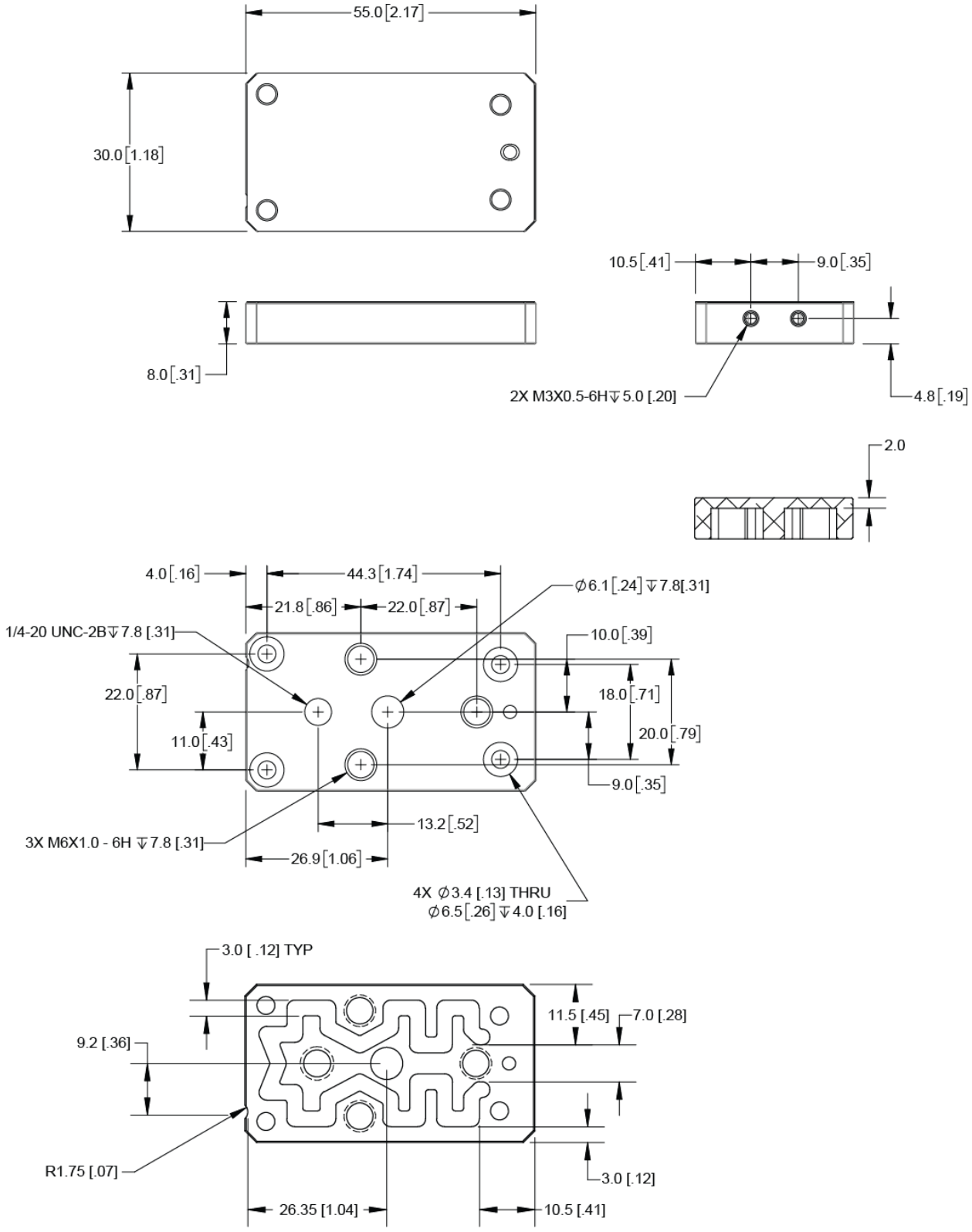

Cleaning/Maintenance

Clean the Housing

To clean the outside of the vision system housing, use a small amount of mild detergent cleaner or isopropyl alcohol on a cleaning cloth. Do not pour the cleaner on the vision system housing.

⚠ **CAUTION**: Do not attempt to clean any DataMan product with harsh or corrosive solvents, including lye, methyl ethyl ketone (MEK) or gasoline.

Clean the Vision System Image Sensor Window

To remove dust from the outside of the image sensor window, use a pressurized air duster. The air must be free of oil, moisture or other contaminants that could remain on the glass and possibly degrade the image. Do not touch the glass window. If oil or smudges remain, use a cotton bud and alcohol (ethyl, methyl, or isopropyl) to clean the window. Do not pour the alcohol on the window.

Clean the Cover

To remove dust from the lens cover, use a pressurized air duster. The air must be free of oil, moisture or other contaminants that could remain on the lens cover. To clean the plastic window of the lens cover, use a small amount of isopropyl alcohol on a cleaning cloth. Do not scratch the plastic window. Do not pour the alcohol on the plastic window.