COGNEX

In-Sight® 7000 Series Vision System

Installation Manual

2022 August 22
Revision: 6.4.0.4

Legal Notices

The software described in this document is furnished under license, and may be used or copied only in accordance with the terms of such license and with the inclusion of the copyright notice shown on this page. Neither the software, this document, nor any copies thereof may be provided to, or otherwise made available to, anyone other than the licensee. Title to, and ownership of, this software remains with Cognex Corporation or its licensor. Cognex Corporation assumes no responsibility for the use or reliability of its software on equipment that is not supplied by Cognex Corporation. Cognex Corporation makes no warranties, either express or implied, regarding the described software, its merchantability, non-infringement or its fitness for any particular purpose.

The information in this document is subject to change without notice and should not be construed as a commitment by Cognex Corporation. Cognex Corporation is not responsible for any errors that may be present in either this document or the associated software.

Companies, names, and data used in examples herein are fictitious unless otherwise noted. No part of this document may be reproduced or transmitted in any form or by any means, electronic or mechanical, for any purpose, nor transferred to any other media or language without the written permission of Cognex Corporation.

Copyright © 2011 - 2020. Cognex Corporation. All Rights Reserved.

Portions of the hardware and software provided by Cognex may be covered by one or more U.S. and foreign patents, as well as pending U.S. and foreign patents listed on the Cognex web site at: cognex.com/patents.

The following are registered trademarks of Cognex Corporation:

Cognex, 2DMAX, Advantage, AlignPlus, Assemblyplus, Check it with Checker, Checker, Cognex Vision for Industry, Cognex VSOC, CVL, DataMan, DisplayInspect, DVT, EasyBuilder, Hotbars, IDMax, In-Sight, Laser Killer, MVS-8000, OmniView, PatFind, PatFlex, PatInspect, PatMax, PatQuick, SensorView, SmartView, SmartAdvisor, SmartLearn, UltraLight, Vision Solutions, VisionPro, VisionView

The following are trademarks of Cognex Corporation:

The Cognex logo, 1DMax, 3D-Locate, 3DMax, BGAII, CheckPoint, Cognex VSoC, CVC-1000, FFD, iLearn, In-Sight (design insignia with cross-hairs), In-Sight 2000, InspectEdge, Inspection Designer, MVS, NotchMax, OCRMax, PatMax RedLine, ProofRead, SmartSync, ProfilePlus, SmartDisplay, SmartSystem, SMD4, VisiFlex, Xpand

Portions copyright © Microsoft Corporation. All rights reserved.

Portions copyright © MadCap Software, Inc. All rights reserved.

Other product and company trademarks identified herein are the trademarks of their respective owners.

Regulations/Conformity

Note: For the most current CE declaration and regulatory conformity information, see the Cognex support site: cognex.com/support.

Declaration of Conformity	
Manufacturer	Cognex Corporation One Vision Drive Natick, MA 01760 USA
CE	In-Sight 7010/7010C/7020/7050: Regulatory Model 1AAA In-Sight 7200/7200C/7210/7230: Regulatory Model 1AAA In-Sight 7400/7400C/7410/7430: Regulatory Model 1AAA In-Sight 7402/7402C/7412/7432: Regulatory Model 1AAA This is a class A product. In a domestic environment this product may cause radio interference in which case the user may be required to take immediate measures. This equipment complies with the essential requirements of the EU Directive 2014/30/EU. Declarations are available from your local representative.
EU RoHS	Compliant to the most recent applicable directive.
FCC	FCC Part 15, Class A This equipment has been tested and found to comply with the limits for a Class A digital device, pursuant to part 15 of the FCC Rules. These limits are designed to provide reasonable protection against harmful interference when the equipment is operated in a commercial environment. This equipment generates, uses, and can radiate radio frequency energy and, if not installed and used in accordance with the instruction manual, may cause harmful interference to radio communications. Operation of this equipment in a residential area is likely to cause harmful interference in which case the user will be required to correct the interference at his own expense.
Korea	In-Sight 7010/7010C/7020/7050: Regulatory Model 1AAA KCC-REM-CGX-1AAA In-Sight 7200/7200C/7210/7230: Regulatory Model 1AAA KCC-REM-CGX-1AAA In-Sight 7400/7400C/7410/7430: Regulatory Model 1AAA KCC-REM-CGX-1AAA In-Sight 7402/7402C/7412/7432: Regulatory Model 1AAA KCC-REM-CGX-1AAA This device is certified for office use only and if used at home, there can be frequency interference problems.
TÜV	In-Sight 7010/7010C/7020/7050: Regulatory Model 1AAA In-Sight 7200/7200C/7210/7230: Regulatory Model 1AAA In-Sight 7400/7400C/7410/7430: Regulatory Model 1AAA In-Sight 7402/7402C/7412/7432: Regulatory Model 1AAA
	NRTL: TÜV SÜD SCC/NRTL OSHA Scheme for UL/CAN 61010-1.
	CB report available upon request. TÜV SÜD, IEC/EN 61010-1.

China RoHS

Hazardous Substances 有害物质						
Part Name 部件名称	Lead (Pb) 铅	Mercury (Hg) 汞	Cadmium (Cd) 镉	Hexavalent Chromium (Cr (VI)) 六价铬	Polybrominated biphenyls (PBB) 多溴联苯	Polybrominated diphenyl ethers (PBDE) 多溴二苯醚
Regulatory Model 1AAA	X	O	O	O	O	O

This table is prepared in accordance with the provisions of SJ/T 11364.
这个标签是根据SJ / T 11364 的规定准备的。

O: Indicates that said hazardous substance contained in all of the homogeneous materials for this part is below the limit requirement of GB / T26572 - 2011.
表示本部件所有均质材料中含有的有害物质低于GB / T26572 - 2011 的限量要求。

X: Indicates that said hazardous substance contained in at least one of the homogeneous materials used for this part is above the limit requirement of GB / T26572 - 2011.
表示用于本部件的至少一种均质材料中所含的危害物质超过GB / T26572 - 2011 的限制要求。

For European Community Users

Cognex complies with Directive 2012/19/EU OF THE EUROPEAN PARLIAMENT AND OF THE COUNCIL of 4 July 2012 on waste electrical and electronic equipment (WEEE).

This product has required the extraction and use of natural resources for its production. It may contain hazardous substances that could impact health and the environment, if not properly disposed.

In order to avoid the dissemination of those substances in our environment and to diminish the pressure on the natural resources, we encourage you to use the appropriate take-back systems for product disposal. Those systems will reuse or recycle most of the materials of the product you are disposing in a sound way.

The crossed out wheeled bin symbol informs you that the product should not be disposed of along with municipal waste and invites you to use the appropriate separate take-back systems for product disposal.

If you need more information on the collection, reuse, and recycling systems, please contact your local or regional waste administration.

You may also contact your supplier for more information on the environmental performance of this product.

Precautions

To reduce the risk of injury or equipment damage, observe the following precautions when you install the Cognex product:

- The In-Sight vision system is intended to be supplied by a UL or NRTL listed power supply with a 24VDC output rated for at least 2A continuous and a maximum short circuit current rating of less than 8A and a maximum power rating of less than 100VA and marked Class 2 or Limited Power Source (LPS). Any other voltage creates a risk of fire or shock and can damage the components. Applicable national and local wiring standards and rules must be followed.
- According to IEC 62471, the white ring light is in Risk Group 1; it is not recommended to stare directly into the illumination LEDs when the vision system is receiving power. According to IEC 62471, the blue ring light is in Risk Group 2; CAUTION – Possibly hazardous optical radiation emitted from this product. Do not stare at operating light. May be harmful to the eyes. The green ring light, the red ring light and the Infrared (IR) ring light are Exempt Group products, therefore no precautions are required.
- This product is intended for industrial use in automated manufacturing or similar applications.
- The safety of any system incorporating this product is the responsibility of the assembler of the system.
- Do not install Cognex products where they are exposed to environmental hazards such as excessive heat, dust, moisture, humidity, impact, vibration, corrosive substances, flammable substances, or static electricity.
- Route cables and wires away from high-current wiring or high-voltage power sources to reduce the risk of damage or malfunction from the following causes: over-voltage, line noise, electrostatic discharge (ESD), power surges, or other irregularities in the power supply.
- Do not expose the image sensor to laser light. Image sensors can be damaged by direct, or reflected, laser light. If your application requires laser light that might strike the image sensor, use a lens filter at the corresponding laser wavelength. For suggestions, contact your local integrator or application engineer.
- This product does not contain user-serviceable parts. Do not make electrical or mechanical modifications to product components. Unauthorized modifications can void your warranty.
- Changes or modifications not expressly approved by the party responsible for regulatory compliance could void the user’s authority to operate the equipment.
- Include service loops with cable connections.
- Ensure that the cable bend radius begins at least six inches from the connector. Cable shielding can be degraded or cables can be damaged or wear out faster if a service loop or bend radius is tighter than 10X the cable diameter.
- This device should be used in accordance with the instructions in this manual.

Table of Contents

Legal Notices **2**

Regulations/Conformity **3**

China RoHS 4

For European Community Users 5

Precautions **6**

Table of Contents **7**

Introduction **9**

Support 9

Standard Components 9

Standard Components Descriptions 9

Accessories 11

Cables 11

Ethernet Cable 11

Light Cable 12

Breakout Cable 12

Installation **13**

Connectors and Indicators 13

Install the Lens (C-Mount Lens Configuration) 15

Mount the Vision System 17

Working Distance and Field of View 18

Vision System with 1280 x 1024 Resolution (mm) 18

Vision System with 1280 x 1024 Resolution (in) 18

Vision System with 800 x 600 Resolution (mm) 19

Vision System with 800 x 600 Resolution (in) 19

Connect the Light Cable (Optional) 20

Connect the Ethernet Cable 20

Connect the Breakout Cable 21

Specifications **22**

Vision System Specifications 22

I/O Specifications 24

Acquisition Trigger Input 24

General-Purpose Inputs 25

General-Purpose Input - NPN Configuration 26

General-Purpose Input - PNP Configuration 26

High-Speed Outputs 27

High-Speed Output - NPN Configuration 28

High-Speed Output - PNP Configuration 28

RS-232 Receive and Transmit 29

RS-232 Connector Configuration 29

Ethernet Cable Specifications 30

Light Cable Specifications 31

Breakout Cable Specifications 32
Dimensions 33
Vision System Dimensions - M12 Lens Configuration 33
Vision System Dimensions - M12 Lens Configuration (With Mounting Bracket) 34
Vision System Dimensions - C-Mount Lens Configuration (With Lens Cover) 35
Vision System Dimensions - C-Mount Lens Configuration (Without Lens Cover) 36
Cleaning/Maintenance 37
Clean the Vision System Housing 37
Clean the Vision System Image Sensor Window (C-Mount Lens Configuration) 37
Clean the Vision System Lens Cover 37

Introduction

The In-Sight® vision system is a compact, network-ready, stand-alone machine vision system used for automated inspection, measurement, identification and robot guidance applications on the factory floor. All models can be easily configured remotely over a network using an intuitive user interface.

Support

Many information resources are available to help you use the vision system:

- The *In-Sight® Explorer Help* and *EasyBuilder Help* files, provided with In-Sight Explorer software.
- On-demand training: cognex.com/on-demand-training.aspx.
- The In-Sight online support site: cognex.com/support/insight.

Note: For the latest documentation, visit: support.cognex.com/documentation/in-sight.

Standard Components

The vision system is shipped with the components listed below.

Component	M12 Lens Configuration	C-Mount Lens Configuration
Vision System	X	X
Lens Cover Kit (includes lens cover and O-Ring)	X	X
Mounting Kit	X	

Standard Components Descriptions

Component	Description
Vision System (P/N 821-0084-5R) (P/N 821-0084-6R) (P/N 821-0084-7R) (P/N 821-0100-3R) (P/N 821-0100-4R) (P/N 821-0100-5R)	Provides vision processing, job storage, serial and Ethernet connectivity and discrete I/O.
Lens Cover Kit (P/N 820-0277-1R) (P/N 820-0277-2R)	Includes lens cover and O-Ring. Provides environmental protection for the lens.
Mounting Kit (P/N 823-0192-1R)	Includes a mounting bracket and M3 screws (quantity 4) for mounting the vision system and securing it to a mounting surface.

Note:

- There are two lens configurations available for the vision system: an M12 lens configuration and a C-Mount lens configuration. If you purchased a vision system with the M12 lens configuration, the vision system is shipped with the pre-installed lens and ring light. If you purchased a vision system with the C-Mount lens configuration, the lens is not included in the box and must be purchased as an optional component.
- Optional components are available for purchase separately. For a list of options and accessories, contact your Cognex sales representative. For optional components installation instructions, refer to the *In-Sight® 7000 Series Vision System Optional Configurations*, available for download on the In-Sight support site: cognex.com/support/insight.

Accessories

You can purchase the following components separately. For a list of options and accessories, contact your local Cognex sales representative.

Cables

Note: Cables are sold separately.

CAUTION: All cable connectors are keyed to fit the connectors on the vision system. Do not force the connections or damage may occur.

Ethernet Cable

The Ethernet cable is used to connect the vision system to other network devices. The pin-outs for the cable are listed in the *Ethernet Cable Specifications* on page 30. This cable is available in the lengths and styles listed below.

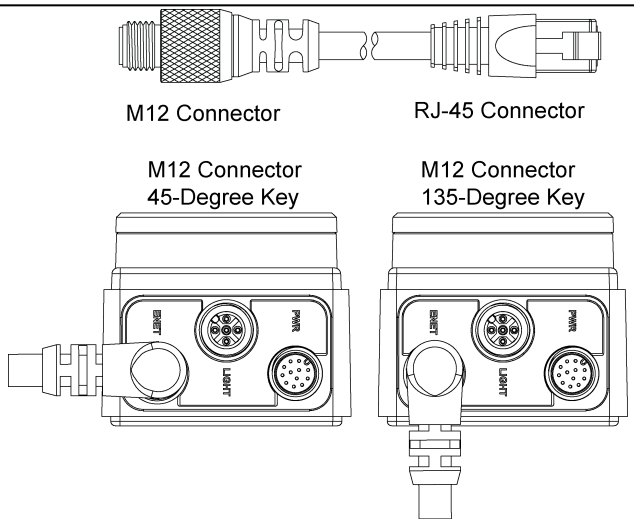

Length	Standard Part #	45-Degree Key Right-Angle Part #	135-Degree Key Right Angle Part #
0.6 m	CCB-84901-1001-00	N/A	N/A
2 m	CCB-84901-1002-02	CCB-84901-6005-02	CCB-84901-7005-02
5 m	CCB-84901-1003-05	CCB-84901-6001-05	CCB-84901-7001-05
10 m	CCB-84901-1004-10	CCB-84901-6002-10	CCB-84901-7002-10
15 m	CCB-84901-1005-15	CCB-84901-6003-15	CCB-84901-7003-15
30 m	CCB-84901-1006-30	CCB-84901-6004-30	CCB-84901-7004-30

Light Cable

The Light cable is used to connect the vision system to an external lighting device, providing power and strobe control. The pin-outs for the cable are listed in the *Light Cable Specifications* on page 31. This cable is available in the lengths listed below.

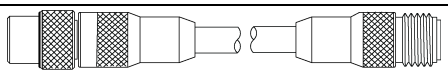

Length	Standard Part #
0.5 m	CCB-M12LTF-00
1 m	CCB-M12LTF-01
2 m	CCB-M12LTF-02
5 m	CCB-M12LTF-05

Breakout Cable

The Breakout cable provides connections to an external power supply, the acquisition trigger input, general-purpose inputs, high-speed outputs and RS-232 serial communications. The pin-outs for the cable are listed in the *Breakout Cable Specifications* on page 32. This cable is available in the styles listed below.

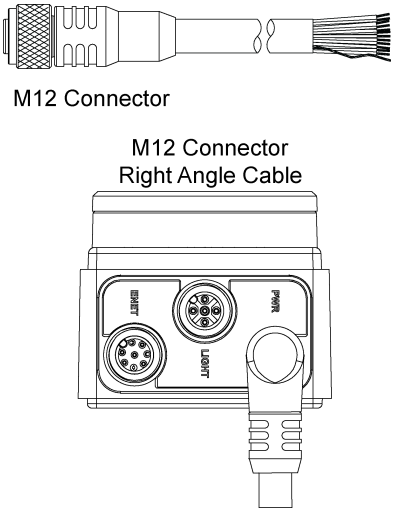

Length	Standard Part #	Right-Angle Part #
5 m	CCB-PWRIO-05	CCB-PWRIO-05R
10 m	CCB-PWRIO-10	CCB-PWRIO-10R
15 m	CCB-PWRIO-15	CCB-PWRIO-15R

Installation

Read this section to learn how the vision system connects to its standard components and accessories. For a list of options and accessories, contact your Cognex sales representative.

Note:
- Cables are sold separately.
- If a standard component is missing or damaged, immediately contact your Cognex Authorized Service Provider (ASP) or Cognex Technical Support.

CAUTION: All cable connectors are keyed to fit the connectors on the vision system. Do not force the connections or damage may occur.

Connectors and Indicators

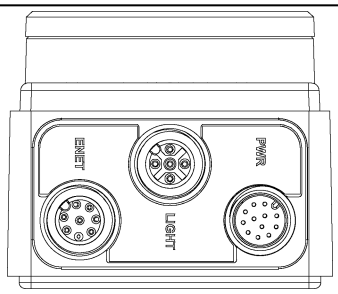

Connector	Function
ENET Connector	Connects the vision system to a network. The ENET connector provides the Ethernet connection to external network devices. For more information, refer to the *Ethernet Cable Specifications* on page 30.
LIGHT Connector	Connects the vision system to an external lighting device. For more information, refer to the *Light Cable Specifications* on page 31.
PWR Connector	Connects the Breakout cable, which provides connections to an external power supply, the acquisition trigger input, general-purpose inputs, high-speed outputs, and RS-232 serial communications. For more information, refer to the *Breakout Cable Specifications* on page 32.

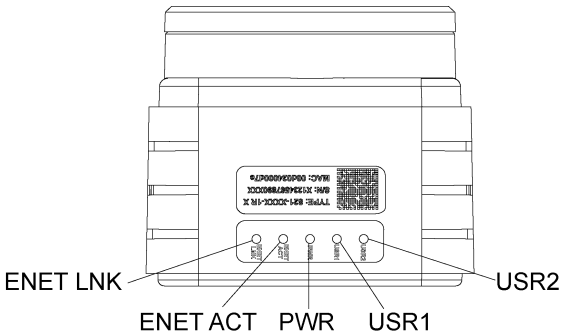

Indicator	Function
ENET LNK LED	Solid green when a network connection is detected.
ENET ACT LED	Flashes green when there is network activity.
PWR LED	Solid green when power is applied.
USR1 LED	Red when active. User-configurable using Discrete Output Line 5 (Line 13 when using the CIO-MICRO or CIO-MICRO-CC I/O module).
USR2 LED	Green when active. User-configurable using Discrete Output Line 4 (Line 12 when using the CIO-MICRO or CIO-MICRO-CC I/O module).

Note: If the USR2 LED blinks green three times followed by the USR1 LED blinking red sixteen times, the vision system is not operating correctly. If power cycling does not resolve the problem, please contact Cognex Technical Support.

When utilizing a POWERLINK-enabled In-Sight vision system, the vision system's LEDs are used to convey POWERLINK-specific behavior status updates. The USR1 LED is used as the POWERLINK error LED, and the USR2 LED is used as POWERLINK status LED.

Indicator	LED Behavior	Function
USR1 LED	Solid red	POWERLINK is in an error state.
USR2 LED	Off	POWERLINK is initializing.
	Blinking at 10Hz	POWERLINK is in basic Ethernet mode (i.e., a POWERLINK Master Node has not been detected on the network).
	One short flash (200ms), followed by a long OFF phase (1000ms)	The vision system has detected a Master Node on the POWERLINK network, however, isochronous communications have not been detected.
	Two short flashes, followed by a long OFF phase	The POWERLINK network has begun isochronous communications, but the vision system has not been configured to participate.
	Three short flashes, followed by a long OFF phase	The Node device has completed configuration, and is awaiting a signal from the Master Node to begin isochronous communications.
	On	The Node device is communicating on the POWERLINK network.
	Blinking at 2.5Hz	The POWERLINK Node has stopped due to an error.

Install the Lens (C-Mount Lens Configuration)

There are two lens configurations available for the vision system: an M12 lens configuration, and a C-Mount lens configuration. If you purchased a vision system with the M12 lens configuration, the vision system is shipped with the lens pre-installed and no additional installation is required. If you purchased a vision system with the C-Mount lens configuration, you will need to complete the following steps to install the lens to the vision system.

Note:

- Autofocus is not supported for the C-Mount lens configuration.
- If you purchased a vision system with the pre-installed M12 lens, the lens can be replaced with other M12 lenses. The Cognex Lens Tool accessory (LNS-M12-TOOLKIT) must be used to replace the M12 lens. For installation instructions, refer to the *In-Sight® 7000 Series Vision System Optional Configurations*, available for download on the In-Sight support site: cognex.com/support/insight.

CAUTION: Using a non-Cognex lens or replacing the M12 lens without the Cognex Lens Tool accessory (LNS-M12-TOOLKIT) may cause damage to the vision system.

1. Remove the protective film covering the threaded lens opening, if present.
2. Attach a C-Mount lens to the vision system.The exact lens focal length needed depends on the working distance and the field of view required for your machine vision application.

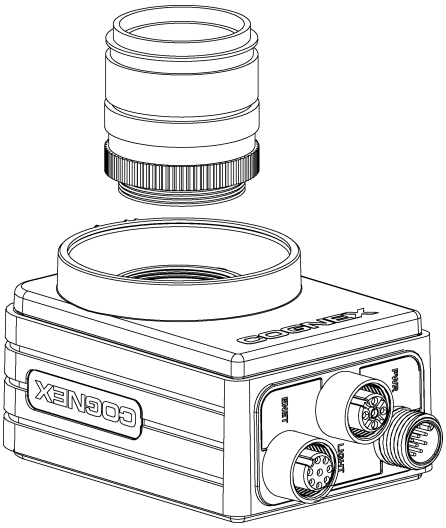

3. If using a lens cover, attach the lens cover to the vision system.

   a. Align the keys on each side of the lens cover with the notches on the vision system, then push the lens cover down to the vision system until it stops moving.

   ⚠ **CAUTION**: The lens cover is "keyed" to fit the vision system; do not force the connections or damage may occur.

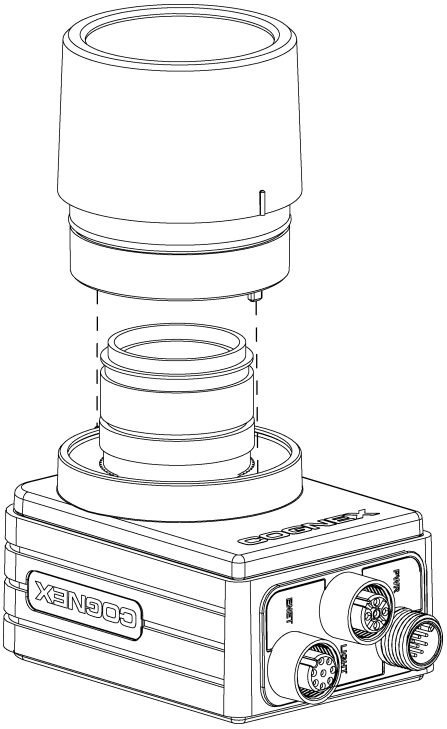

   b. Turn the lens cover clockwise until it is in the locked position.

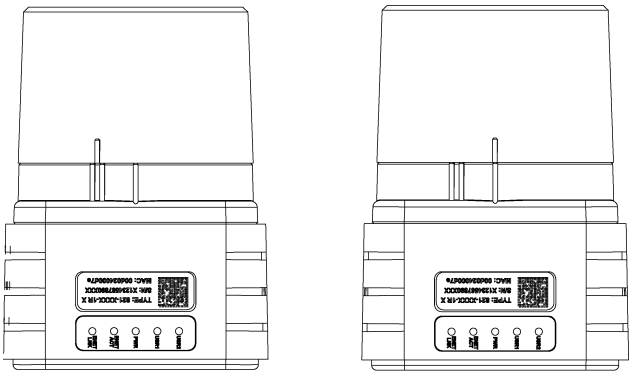

Locked Position | Unlocked Position

Mount the Vision System

The mounting kit includes a mounting bracket and M3 screws (quantity 4) for mounting the vision system and securing it to a mounting surface. The mounting bracket also has 1/4 - 20, M6 and flathead mounting holes available for mounting the vision system to a mounting surface.

Note: The mounting kit is only shipped with vision systems with the M12 lens configuration. If you purchased a vision system with the C-Mount lens configuration, the mounting kit is not included in the box, but can be purchased as an optional component. For more information, contact your Cognex sales representative.

CAUTION:

- When mounting the vision system with the mounting bracket, use the M3 screws supplied with the mounting kit.
- If using the 1/4 - 20 or M6 screw holes on the mounting bracket to secure the vision system to a mounting surface, the insertion depth of the screw should not exceed 7mm. Allowing the mounting screw to bottom in the mounting hole can damage the vision system.
- If mounting the vision system without the mounting bracket, the exposed thread length of the M3 screw should not exceed 3mm. The total length of the M3 screw should be 3mm, plus the thickness of the mounting material used. Otherwise, it may damage the vision system.

1. Align the mounting block with the mounting holes on the vision system.
2. Insert the M3 screws (quantity 4) into the mounting holes and tighten the screws using a 2.5mm hex wrench; the maximum torque is 0.9039 Nm (8 in-lb).

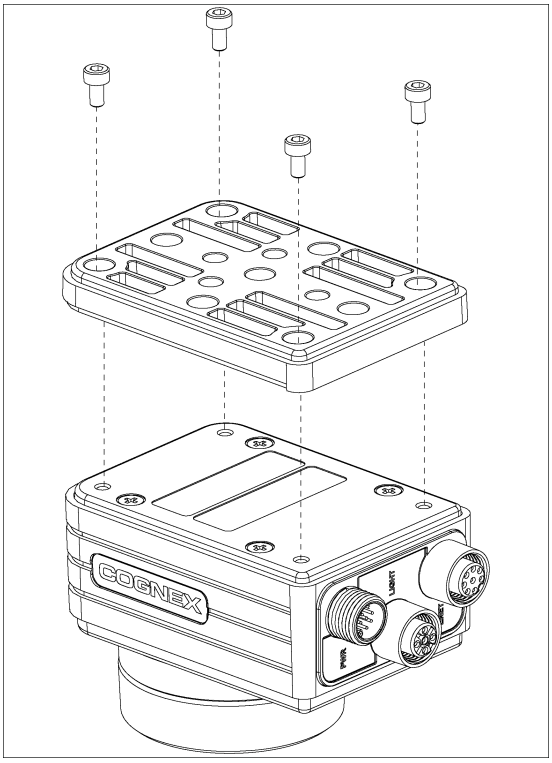

Working Distance and Field of View

The distance from the vision systems' lens to the part that needs to be inspected is the working distance; field of view is what the vision system can see at that distance. As the working distance increases, so does the size of the field of view.

Vision System with 1280 x 1024 Resolution (mm)

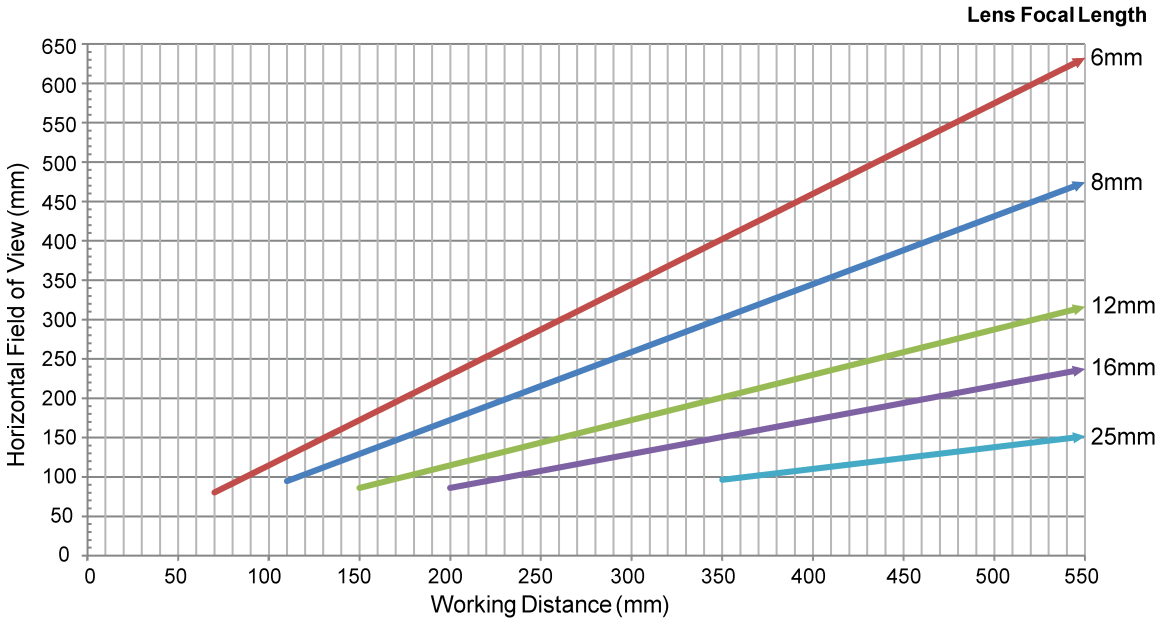

Vision System with 1280 x 1024 Resolution (in)

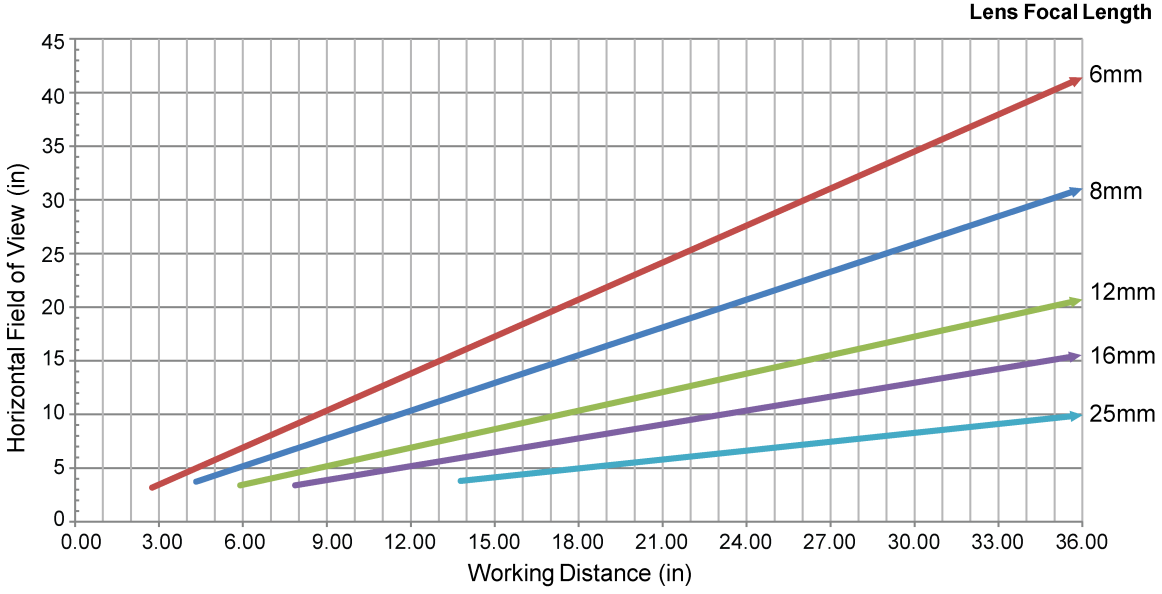

Vision System with 800 x 600 Resolution (mm)

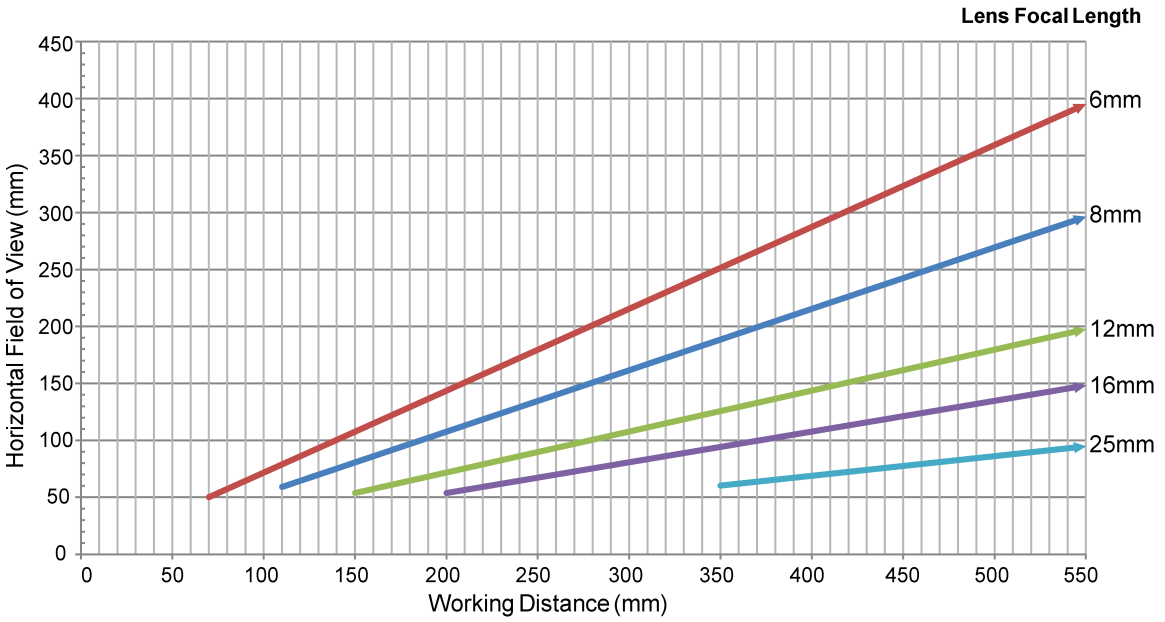

Vision System with 800 x 600 Resolution (in)

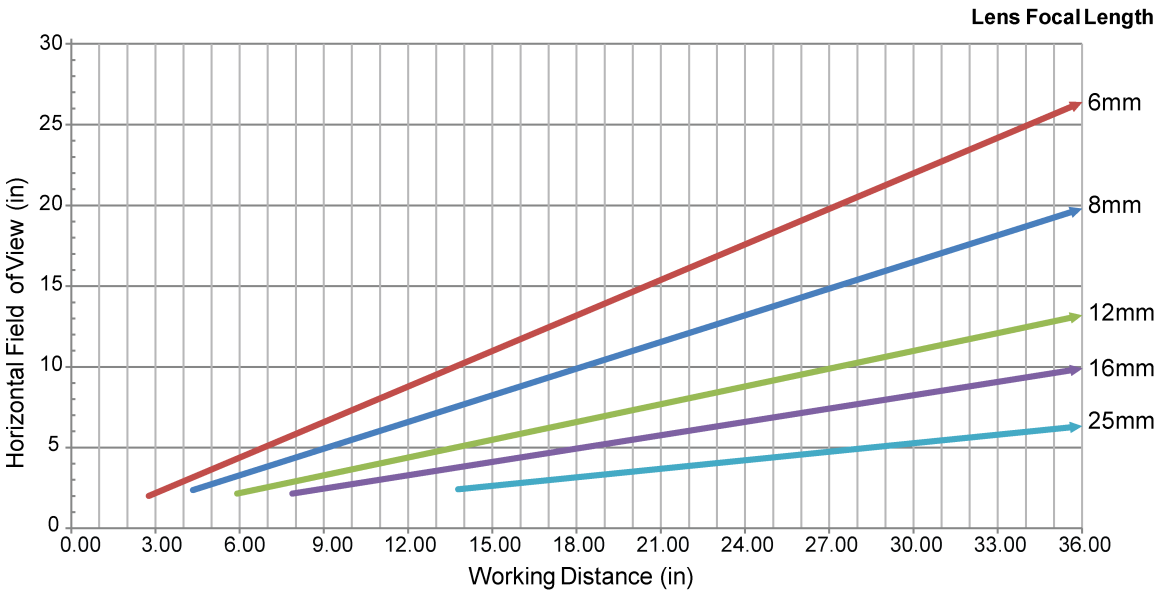

Connect the Light Cable (Optional)

Tip: The space between the vision system connectors is limited; it is recommended to first connect the Light cable to ensure enough space for the connection of the Ethernet cable and Breakout cable.

1. Remove the protective cap from the LIGHT connector, if present.
2. Connect the Light cable's M12 connector to the vision system's LIGHT connector.

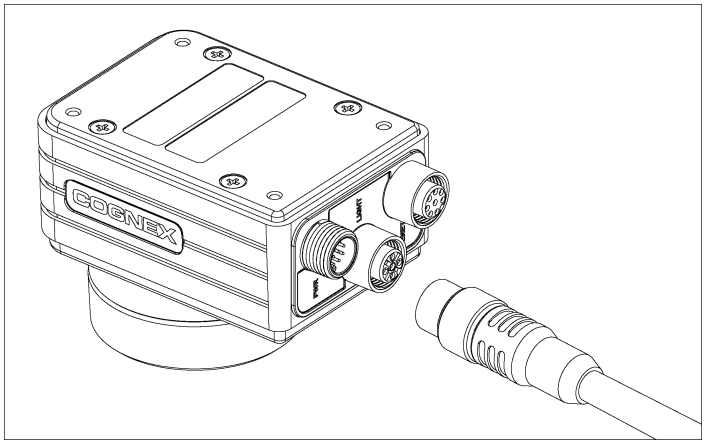

3. Connect the other end of the Light cable to an external lighting device (for example, a strobe light). For more information, refer to the *Light Cable Specifications* on page 31.

Connect the Ethernet Cable

1. Connect the Ethernet cable's M12 connector to the vision system ENET connector.

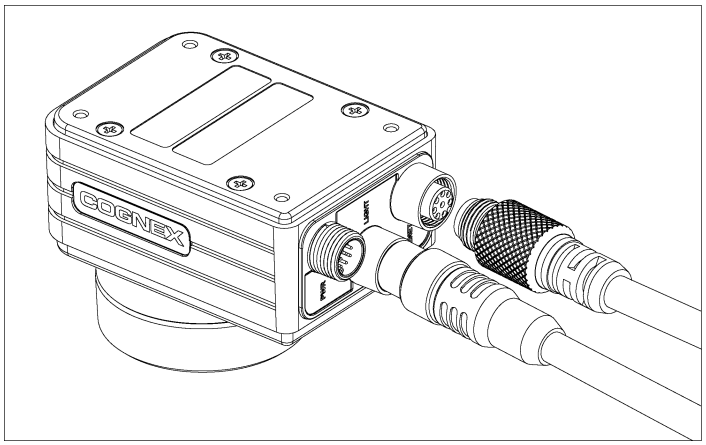

2. Connect the Ethernet cable's RJ-45 connector to a switch/router or PC, as applicable.

Connect the Breakout Cable

Note: You can clip unused wires short or use a tie made of non-conductive material to tie them back. Keep bare wires separated from the +24VDC wire.

1. Verify that the 24VDC power supply is unplugged and not receiving power.
2. Optionally, connect the I/O or serial wires to an appropriate device (for example, a PLC or a serial device). Refer to *Breakout Cable Specifications* on page 32 for wiring details.
3. Attach the Breakout cable's +24VDC (Red wire) and GND (Black wire) to the corresponding terminals on the power supply. Refer to *Breakout Cable Specifications* on page 32 for wiring details.

   CAUTION: Never connect voltages other than 24VDC. Always observe the polarity shown.

4. Connect the Breakout cable's M12 connector to the vision system PWR connector.

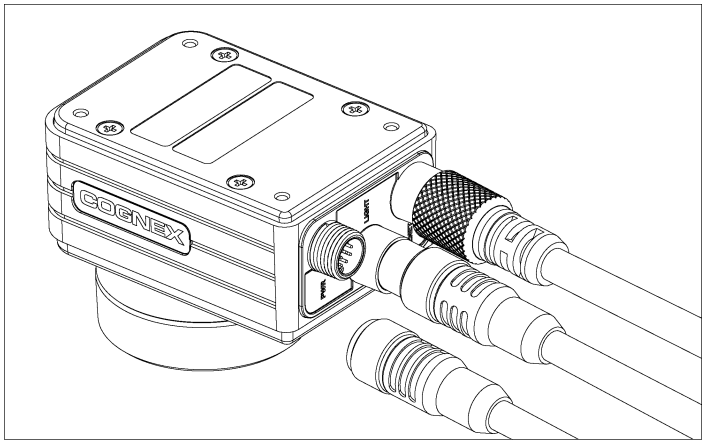

5. Restore power to the 24VDC power supply and turn it on if necessary.

Specifications

The following sections list general specifications for the In-Sight vision system.

Vision System Specifications

Specifications	In-Sight 7010/7020/7050/7200/ 7210/7230/7400/7410/7430	In-Sight 7010C/7200C/7400C	In-Sight 7402/7412/7432	In-Sight 7402C
Minimum Firmware Requirement	In-Sight Version 4.9.0			
Job/Program Memory	512MB non-volatile flash memory; unlimited storage via remote network device.			
Image Processing Memory	256MB SDRAM			
Sensor Type	1/1.8-inch CMOS			
Sensor Properties	5.3mm diagonal, 5.3 x 5.3µm sq. pixels		8.7mm diagonal, 5.3 x 5.3µm sq. pixels	
Maximum Resolution (pixels)[1]	800 x 600		1280 x 1024	
Electronic Shutter Speed	16µs to 950ms			
Acquisition	Rapid reset, progressive scan, full-frame integration.			
Bit Depth	256 grey levels (8 bits/pixel)	24-bit color	256 grey levels (8 bits/pixel)	24-bit color
Frames Per Second[2]	102 full frames per second.	50 full frames per second.	60 full frames per second.	30 full frames per second.
Lens Type	M12 or C-Mount.			
Trigger	1 opto-isolated, acquisition trigger input. Remote software commands via Ethernet and RS-232C.			
Discrete Inputs	3 general-purpose inputs when connected to the Breakout cable. (Eight additional inputs available when using the optional CIO-MICRO or CIO-MICRO-CC I/O module.)			
Discrete Outputs	4 high-speed outputs when connected to the Breakout cable. (Eight additional outputs available when using the optional CIO-MICRO or CIO-MICRO-CC I/O module.)			
Status LEDs	Network link and activity, power and 2 user-configurable.			

[1] You can configure the number of image sensor rows and set them in the In-Sight Explorer software. If you decrease the number of rows, it increases the frames per second acquired by the vision system. Refer to the AcquireImage topic in the *In-Sight® Explorer Help* file for more information.

[2] Maximum frames per second are job-dependent, based on the minimum exposure for a full image frame capture using the dedicated acquisition trigger, and assumes there is no user interface connection to the vision system.

Specifications	In-Sight 7010/7020/7050/7200/ 7210/7230/7400/7410/7430	In-Sight 7010C/7200C/7400C	In-Sight 7402/7412/7432	In-Sight 7402C
Internal LED Ring Light	Red, Green, Blue, White, IR (M12 lens configuration only). • White LED color temperature: 4100 K • Red LED wavelength: 625 nm • Green LED wavelength: 530 nm • Blue LED wavelength: 470 nm • IR LED wavelength: 850 nm			
Network Communication	Ethernet port, 10/100 BaseT with auto MDI/MDIX. IEEE 802.3 TCP/IP protocol. Supports DHCP (factory default), static and link-local IP address configuration.			
Serial Communication	RS-232C: 4800 to 115,200 baud rates.			
Power Consumption	24VDC ±10%, 2.0 amp.			
Material	Aluminum housing.			
Finish	Painted.			
Mounting	Four M3 threaded mounting holes (1/4 - 20, M6 and flathead mounting holes also available on mounting bracket).			
Lens Cover View Port Material	Clear, hard-coated optical grade acrylic precision sheet with scratch-resistance coating on both sides.			
M12 Lens Configuration Dimensions	55mm (2.17in) x 84.8mm (3.34in) x 55mm (2.17in)			
C-Mount Lens Configuration Dimensions	75mm (2.95in) to 83mm (3.27in) x 84.8mm (3.34in) x 55mm (2.17in) with lens cover installed.			
	42.7mm (1.68in) x 84.8mm (3.34in) x 55mm (2.17in) without lens cover installed.			
Weight	220 g (7.8 oz.) with lens cover and typical M12 lens installed.			
Operating Temperature	0°C to 45°C (32°F to 113°F)			
Storage Temperature	-30°C to 80°C (-22°F to 176°F)			
Humidity	90%, non-condensing (Operating and Storage)			
Protection	IP67 with lens cover properly installed.			
Shock (Shipping and Storage)	80 G Shock per IEC 60068-2-27.			
Vibration (Shipping and Storage)	10G from 10-500Hz with a 50 gram or lighter lens per IEC60068-2-6, FC (C-Mount lens configuration only).			
Regulatory Compliance	CE, FCC, KCC, TÜV SÜD NRTL, EU RoHS			

I/O Specifications

Cable and connector specifications and connection examples for acquisition trigger input, general-purpose inputs, high-speed outputs and RS-232 serial communications are provided in the following sections.

Acquisition Trigger Input

The vision system features one acquisition trigger input, which is optically isolated. You can configure the acquisition trigger input to trigger from an NPN (current sinking) or PNP (current sourcing) device.

Specification	Description
Voltage	ON: 24VDC ± 10% (24VDC nominal) OFF: 0 to 3VDC (0VDC nominal)
Current	ON: 6.6mA to 9.8mA OFF: <1mA Resistance: ~3.2 kOhms
Delay[1]	90µs maximum latency between leading edge of trigger and start of acquisition. Input pulse should be a minimum of 1ms wide

The Breakout cable can be used to trigger from an NPN photoelectric sensor or PLC output. Connect INPUT COMMON to +24VDC and TRIGGER to the output of the photoelectric sensor. When the output turns ON, it pulls INPUT COMMON down to 0VDC, turning the opto-coupler ON. For more information, refer to the *Breakout Cable Specifications* on page 32.

The Breakout cable can also be used to trigger from a PNP photoelectric sensor or PLC output. Connect INPUT COMMON to 0VDC and TRIGGER to the output of the photoelectric sensor. When the output turns ON, it pulls TRIGGER up to +24VDC, turning the opto-coupler ON. For more information, refer to the *Breakout Cable Specifications* on page 32.

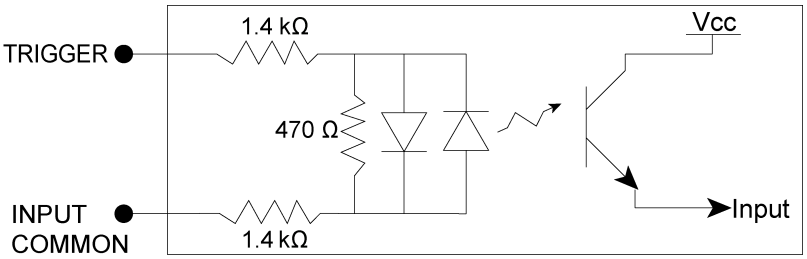

[1] Maximum latency is based on a 1µs trigger debounce.

General-Purpose Inputs

The vision system features three built-in general-purpose inputs, which are optically isolated. The inputs can be configured as either NPN (current sinking) or PNP (current sourcing) lines.

Note: Since all general-purpose inputs share a common ground (INPUT COMMON), all connected input devices must be either current sinking or current sourcing.

Specification	Description
Voltage	ON: 24VDC ± 10% (24VDC nominal) OFF: 0 to 3VDC (0VDC nominal)
Current	ON: 6.6mA to 9.8mA OFF: <1mA Resistance: ~3.2 kOhms
Delay[1]	90µs maximum latency between leading edge of trigger and start of acquisition. Input pulse should be a minimum of 1ms wide.

For NPN lines, to utilize an input, connect INPUT COMMON to +24VDC and attach the photoelectric sensor or PLC output to the corresponding input.

For PNP lines, to utilize an input, connect INPUT COMMON to 0VDC and attach the photoelectric sensor or PLC output to the corresponding input.

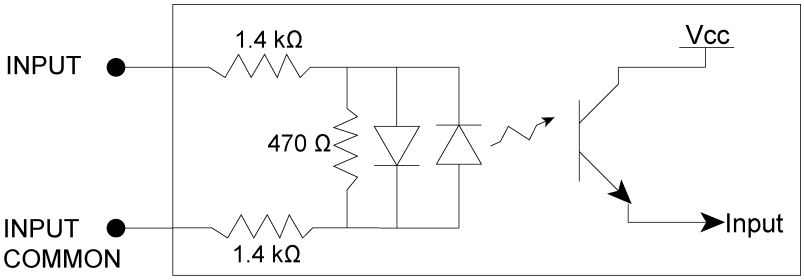

[1] Maximum latency is based on a 1µs trigger debounce.

General-Purpose Input - NPN Configuration

The Breakout cable can be used to connect to an NPN-compatible PLC output. Connect any general-purpose input directly to the PLC output. For more information, refer to the *Breakout Cable Specifications* on page 32.

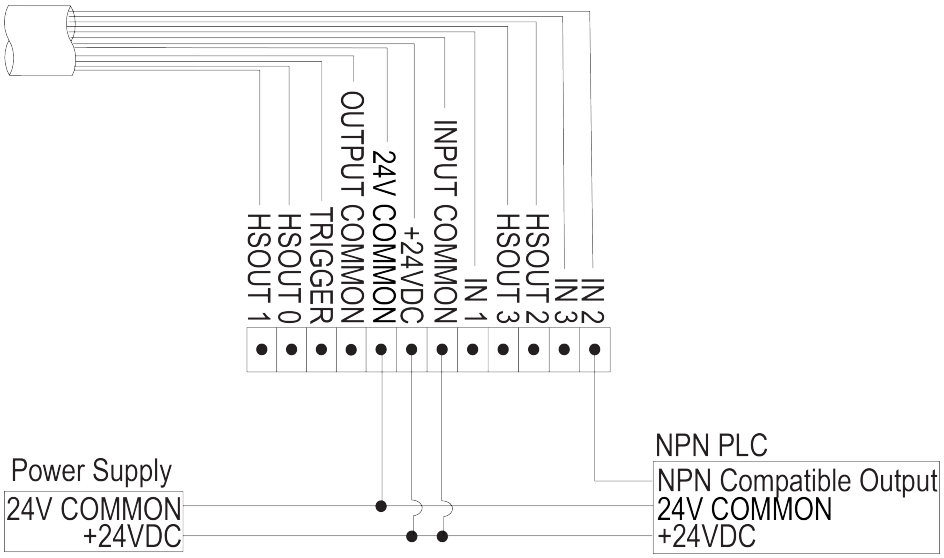

General-Purpose Input - PNP Configuration

The Breakout cable can be used to connect to a PNP-compatible PLC output. Connect any general-purpose input directly to the PLC output. For more information, refer to the *Breakout Cable Specifications* on page 32.

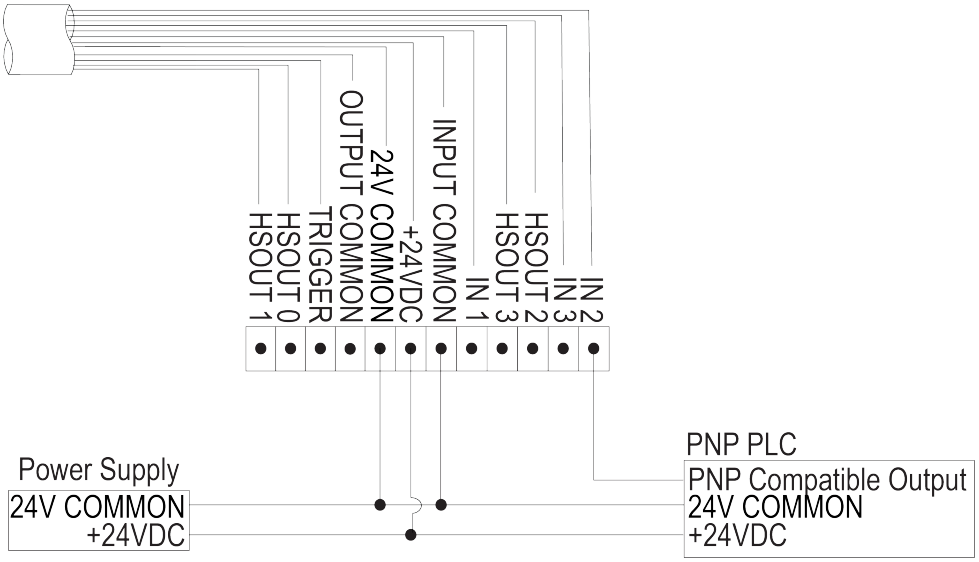

High-Speed Outputs

The vision system features four built-in high-speed outputs, which are optically isolated. The outputs can be configured as either NPN (current sinking) or PNP (current sourcing) lines.

Note: Since all high-speed outputs share a common ground (OUTPUT COMMON), all connected output devices must be either current sinking or current sourcing.

Specification	Description
Voltage	30VDC maximum through external load.
Current	100mA maximum sink current.
	OFF state leakage current 100µA maximum.
	External load resistance <10 kOhms.
	Each line rated at a maximum 100mA, protected against over-current, short circuit and transients from switching inductive loads. High current inductive loads require an external protection diode.
Delay[1]	ON: 750µs maximum latency. OFF: 200µs maximum latency.

For NPN lines, the external load should be connected between the output and the positive supply voltage (+24VDC nominal). OUTPUT COMMON should be connected to the negative supply voltage (0VDC). The outputs pull down to 1VDC or less when ON, which causes current to flow through the load. When the outputs are OFF, no current flows through the load.

For PNP lines, the external load should be connected between the output and the negative supply voltage (0VDC). When OUTPUT COMMON is connected to the positive supply voltage (+24VDC nominal), the outputs pull up to 23VDC or greater when ON, and current flows through the load. When the outputs are OFF, no current flows through the load.

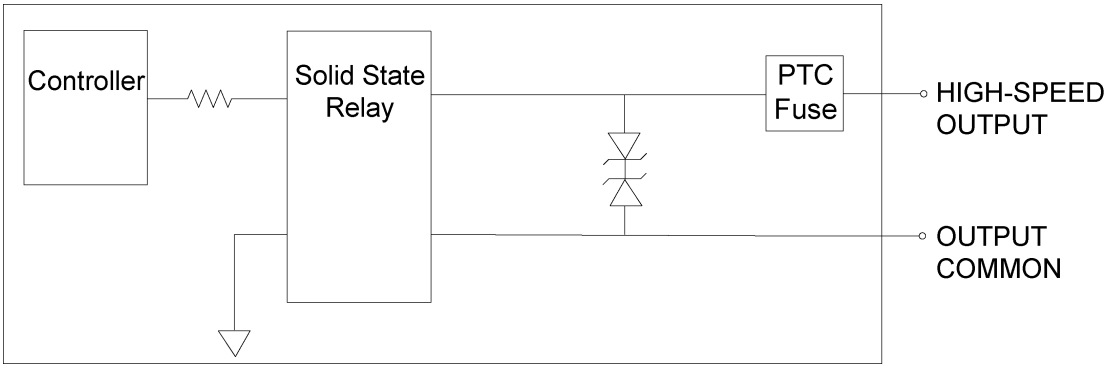

[1] If HSOUT 0 is configured as a Strobe output type within In-Sight Explorer, the maximum strobe latency is 200µs. For more information, refer to the *In-Sight® Explorer Help* file.

High-Speed Output - NPN Configuration

The Breakout cable can be used to connect to an NPN-compatible PLC input. Connect any high-speed output directly to the PLC input. When enabled, the output pulls the PLC input down to 1VDC or less. For more information, refer to the *Breakout Cable Specifications* on page 32.

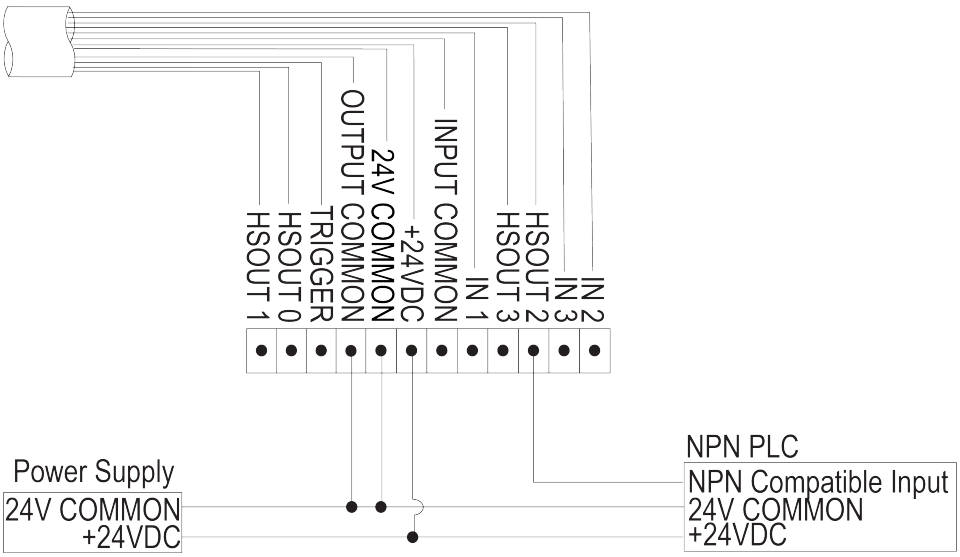

High-Speed Output - PNP Configuration

The Breakout cable can be used to connect to a PNP-compatible PLC input. Connect any high-speed output directly to the PLC input. When enabled, the output pulls the PLC input up to 23VDC or greater. For more information, refer to the *Breakout Cable Specifications* on page 32.

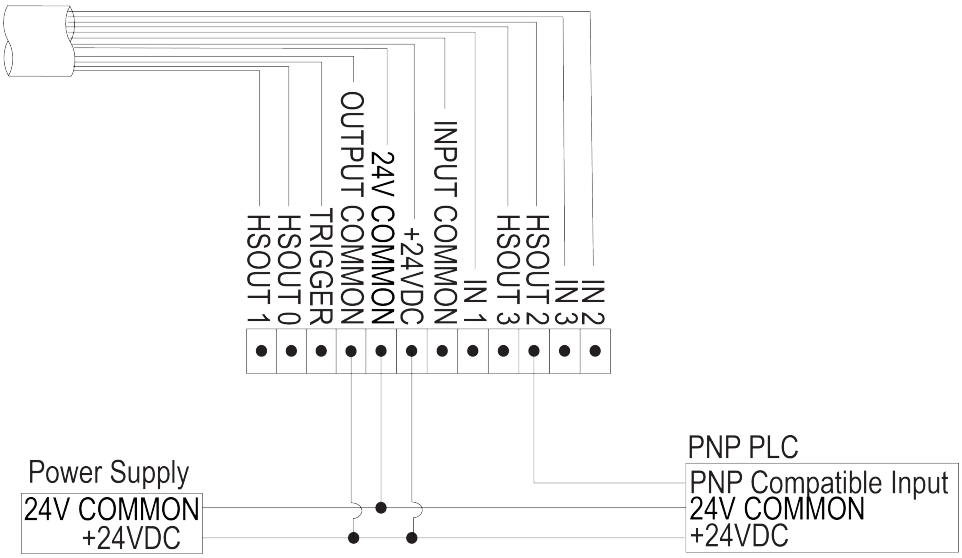

RS-232 Receive and Transmit

The vision system can be connected to an RS-232 interface, which is non-isolated. When enabled, the RS-232 RECEIVE signal replaces IN 1, and the RS-232 TRANSMIT signal replaces HSOUT 1.

Specification	Description
Resistance	>10 kOhms
Baud rates	4800, 9600, 19200, 38400, 57600 and 115200.
Data Bits	7, 8
Stop Bits	1, 2
Parity	None, even and odd.
Handshaking	Software: Xon/Xoff. Hardware: None.[1]

RS-232 Connector Configuration

The Breakout cable can be used to connect to an RS-232 connector. For more information, refer to the *Breakout Cable Specifications* on page 32.

Tip: If the serial signal output is not detected, make sure the 24V COMMON line is connected between the RS-232 device and the vision system.

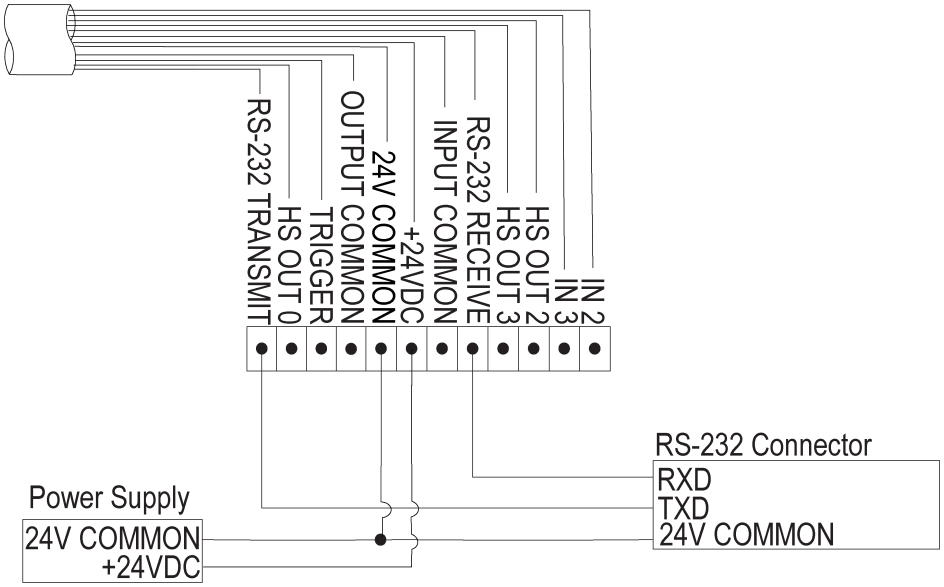

[1] If hardware handshaking is required, an I/O module must be used.

Ethernet Cable Specifications

The Ethernet cable is used to connect the vision system to other network devices. The Ethernet cable can be connected to a single device or provide connections to multiple devices via a network switch or router.

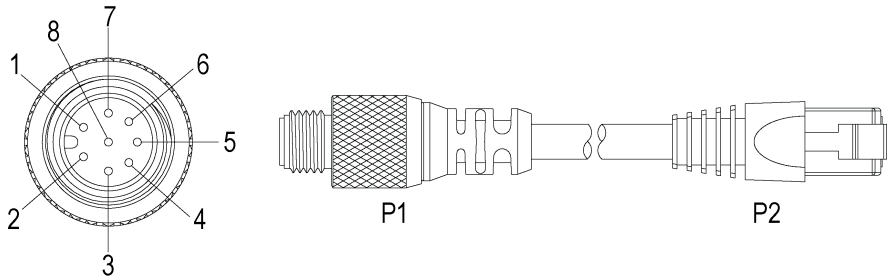

P1 Pin#	Signal Name	Wire Color	P2 Pin#
6	TPO+	White/Orange	1
4	TPO-	Orange	2
5	TPI+	White/Green	3
7	TRMA	Blue	4
1	TRMB	White/Blue	5
8	TPI-	Green	6
2	TRMC	White/Brown	7
3	TRMD	Brown	8

Note:

- Cables are sold separately.
- The wiring for this cable follows standard industrial Ethernet M12 specifications. This varies from the 568B standard.

Light Cable Specifications

The Light cable is used to connect the vision system to an external lighting device, providing power and strobe control. The vision system can be connected to either a continuous lighting device or a strobed lighting device. Before using a lighting device, you must use the Light Settings dialog within In-Sight Explorer to configure the light settings for either a PNP or NPN configuration, depending on the light vendor. For more information, refer to the Light Settings topic in the *In-Sight® Explorer Help* file.

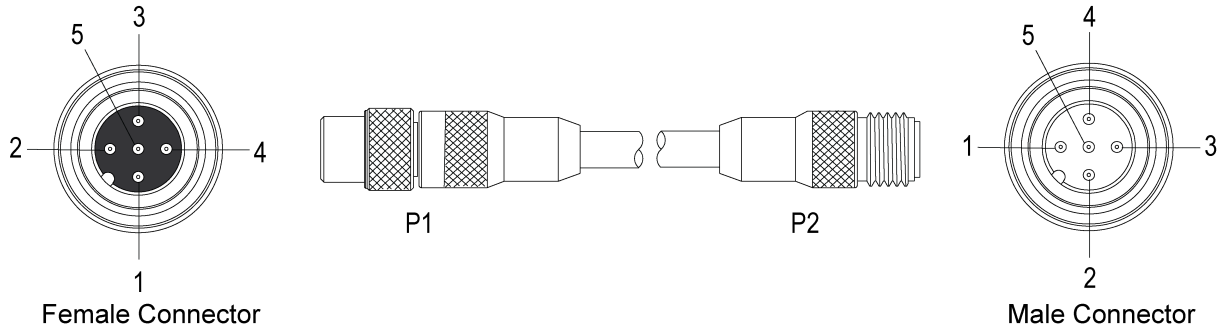

Pin#	Signal Name	Wire Color
1	LIGHT POWER[1]	Brown
2	RESERVED	White
3	24V COMMON	Blue
4	STROBE[2]	Black
5	RESERVED	Grey

Note: Cables are sold separately.

[1] Light Power: 24VDC; Continunously ON: 500mA Max; Strobe: 1amp Max at 50% duty cycle (max on time of 100ms).

[2] Strobe: 5mA Max current; 10 µs maximum latency between leading edge of trigger and start of strobe. Strobe pulse should be a minimum of 1ms wide.

Breakout Cable Specifications

The Breakout cable provides connections to an external power supply, the acquisition trigger input, general-purpose inputs, high-speed outputs and RS-232 serial communications. The Breakout cable is not terminated.

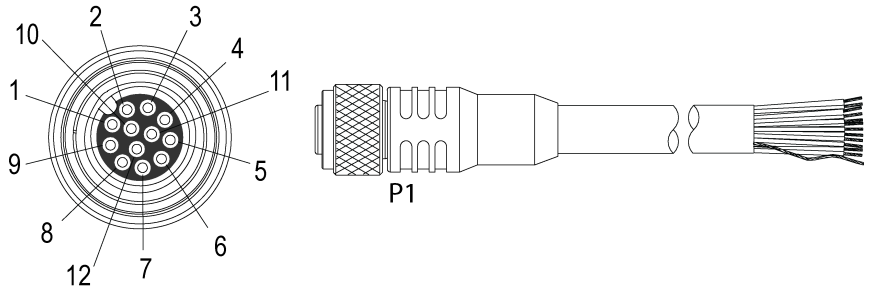

Pin#	Signal Name (I/O Mode)	Wire Color
1	IN 2	Yellow
2	IN 3	White/Yellow
3	HSOUT 2	Brown
4	HSOUT 3	White/Brown
5	IN 1/ RS-232 RECEIVE[1]	Violet
6	INPUT COMMON	White/Violet
7	+24VDC	Red
8	24V COMMON	Black
9	OUTPUT COMMON	Green
10	TRIGGER	Orange
11	HSOUT 0	Blue
12	HSOUT 1/ RS-232 TRANSMIT[2]	Grey
Shell	SHIELD	Bare Wire

Note:
- Cables are sold separately.
- You can clip unused wires short or use a tie made of non-conductive material to tie them back. Keep bare wires separated from the +24VDC wire.

[1] If hardware handshaking is required, an I/O module must be used.

[2] If hardware handshaking is required, an I/O module must be used.

Dimensions

The following sections list dimensions of the vision system and optional accessories.

Vision System Dimensions - M12 Lens Configuration

Note:

- Dimensions are in millimeters [inches] and are for reference purposes only.
- All specifications are for reference purposes only and can change without notice.

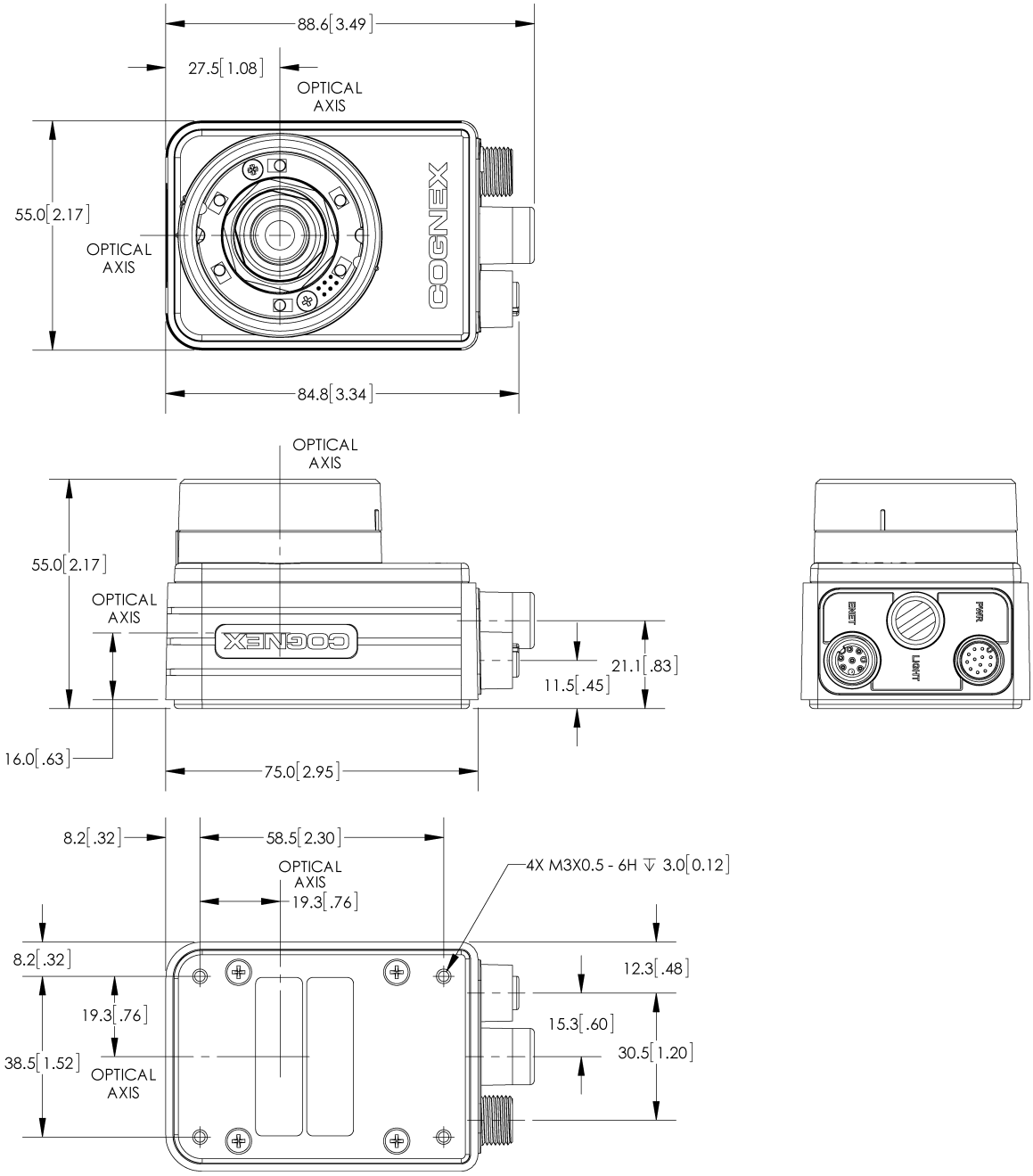

Vision System Dimensions - M12 Lens Configuration (With Mounting Bracket)

Note:

- Dimensions are in millimeters [inches] and are for reference purposes only.
- All specifications are for reference purposes only and can change without notice.

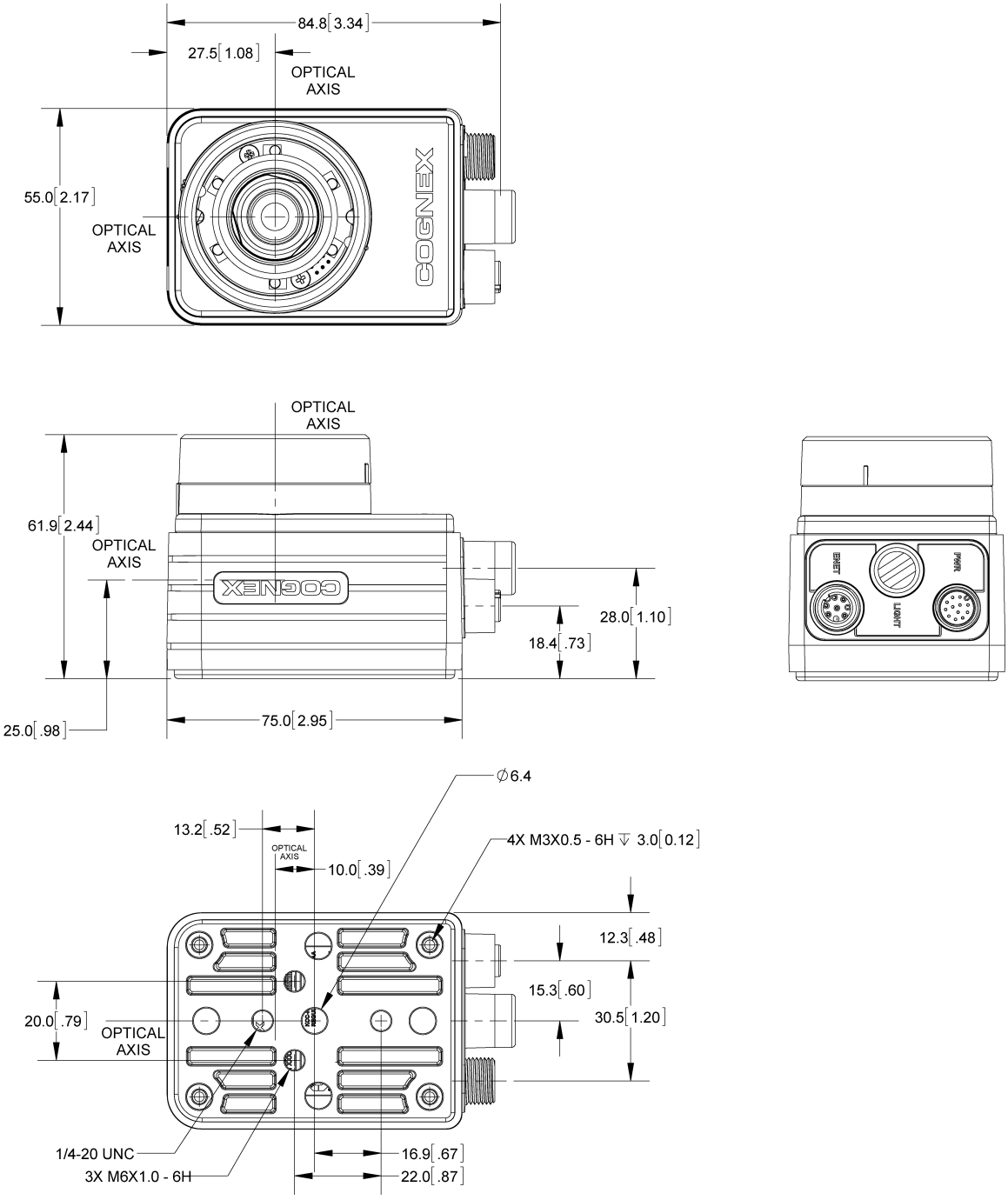

Vision System Dimensions - C-Mount Lens Configuration (With Lens Cover)

Note:

- Dimensions are in millimeters [inches] and are for reference purposes only.
- All specifications are for reference purposes only and can change without notice.

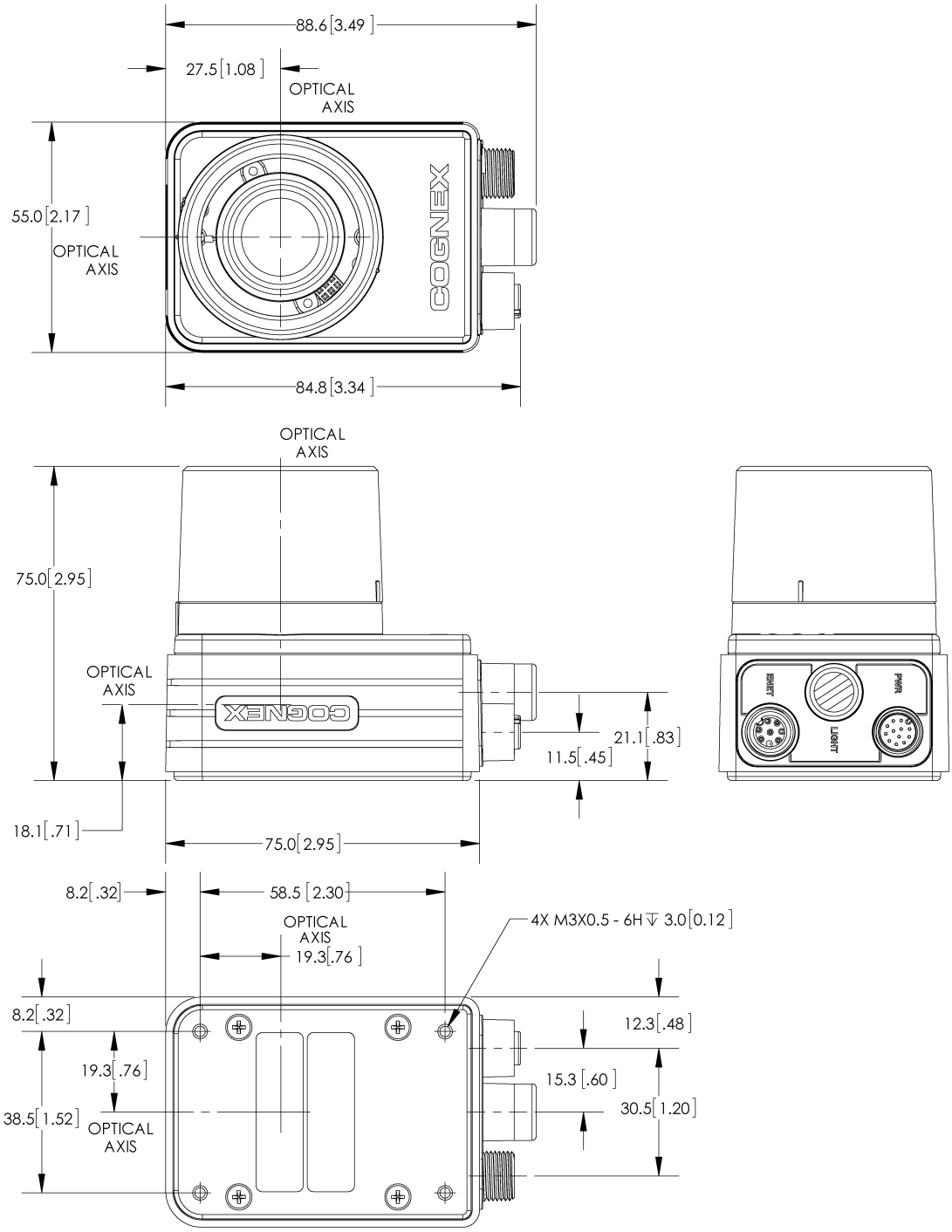

Vision System Dimensions - C-Mount Lens Configuration (Without Lens Cover)

Note:

- Dimensions are in millimeters [inches] and are for reference purposes only.
- All specifications are for reference purposes only and can change without notice.

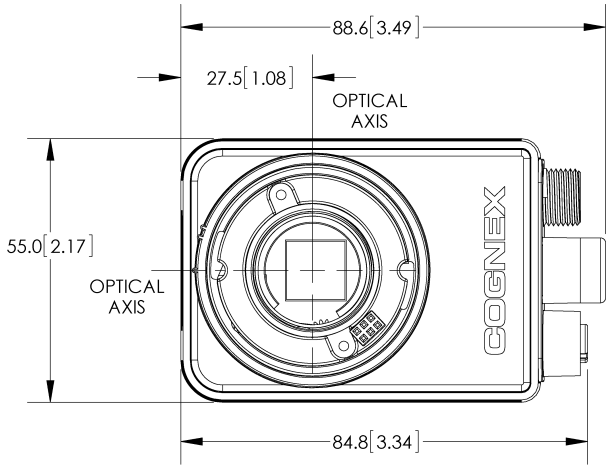

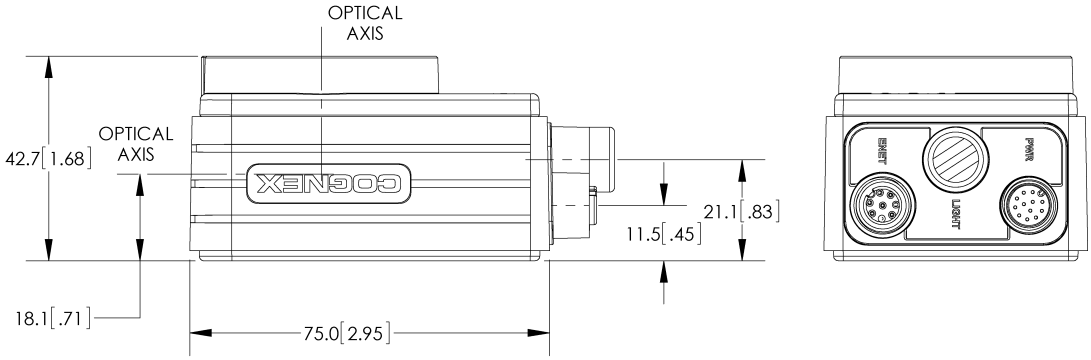

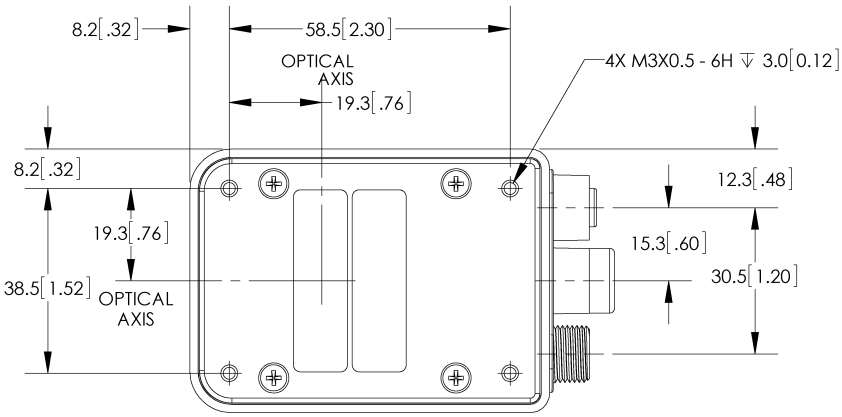

Cleaning/Maintenance

Clean the Vision System Housing

To clean the outside of the vision system housing, use a small amount of mild detergent cleaner or isopropyl alcohol on a cleaning cloth. Do not pour the cleaner on the vision system housing.

⚠ **CAUTION**: Do not attempt to clean any DataMan product with harsh or corrosive solvents, including lye, methyl ethyl ketone (MEK) or gasoline.

Clean the Vision System Image Sensor Window (C-Mount Lens Configuration)

To remove dust from the outside of the image sensor window, use a pressurized air duster. The air must be free of oil, moisture or other contaminants that could remain on the glass and possibly degrade the image. Do not touch the glass window. If oil or smudges remain, use a cotton bud and alcohol (ethyl, methyl, or isopropyl) to clean the window. Do not pour the alcohol on the window.

Clean the Vision System Lens Cover

To remove dust from the lens cover, use a pressurized air duster. The air must be free of oil, moisture or other contaminants that could remain on the lens cover. To clean the plastic window of the lens cover, use a small amount of isopropyl alcohol on a cleaning cloth. Do not scratch the plastic window. Do not pour the alcohol on the plastic window.