COGNEX

In-Sight® 8000 Series Vision System

Reference Guide

2018 July 13
Revision: 5.6.1.7

Legal Notices

The software described in this document is furnished under license, and may be used or copied only in accordance with the terms of such license and with the inclusion of the copyright notice shown on this page. Neither the software, this document, nor any copies thereof may be provided to, or otherwise made available to, anyone other than the licensee. Title to, and ownership of, this software remains with Cognex Corporation or its licensor. Cognex Corporation assumes no responsibility for the use or reliability of its software on equipment that is not supplied by Cognex Corporation. Cognex Corporation makes no warranties, either express or implied, regarding the described software, its merchantability, non-infringement or its fitness for any particular purpose.

The information in this document is subject to change without notice and should not be construed as a commitment by Cognex Corporation. Cognex Corporation is not responsible for any errors that may be present in either this document or the associated software.

Companies, names, and data used in examples herein are fictitious unless otherwise noted. No part of this document may be reproduced or transmitted in any form or by any means, electronic or mechanical, for any purpose, nor transferred to any other media or language without the written permission of Cognex Corporation.

Copyright © 2015 - 2018. Cognex Corporation. All Rights Reserved.

Portions of the hardware and software provided by Cognex may be covered by one or more U.S. and foreign patents, as well as pending U.S. and foreign patents listed on the Cognex web site at: http://www.cognex.com/patents.

The following are registered trademarks of Cognex Corporation:

Cognex, 2DMAX, Advantage, AlignPlus, Assemblyplus, Check it with Checker, Checker, Cognex Vision for Industry, Cognex VSOC, CVL, DataMan, DisplayInspect, DVT, EasyBuilder, Hotbars, IDMax, In-Sight, Laser Killer, MVS-8000, OmniView, PatFind, PatFlex, PatInspect, PatMax, PatQuick, SensorView, SmartView, SmartAdvisor, SmartLearn, UltraLight, Vision Solutions, VisionPro, VisionView

The following are trademarks of Cognex Corporation:

The Cognex logo, 1DMax, 3D-Locate, 3DMax, BGAII, CheckPoint, Cognex VSoC, CVC-1000, FFD, iLearn, In-Sight (design insignia with cross-hairs), In-Sight 2000, InspectEdge, Inspection Designer, MVS, NotchMax, OCRMax, PatMax RedLine, ProofRead, SmartSync, ProfilePlus, SmartDisplay, SmartSystem, SMD4, VisiFlex, Xpand

Portions copyright © Microsoft Corporation. All rights reserved.

Portions copyright © MadCap Software, Inc. All rights reserved.

Other product and company trademarks identified herein are the trademarks of their respective owners.

Regulations/Conformity

Note: For the most up-to-date CE declaration and regulatory conformity information, please refer to the Cognex online support site: http://www.cognex.com/Support.

Safety and Regulatory	
Manufacturer	Cognex Corporation One Vision Drive Natick, MA 01760 USA
CE	In-Sight 8200/8200C: Regulatory Model 1AAW In-Sight 8400/8400C: Regulatory Model 1AAW In-Sight 8401/8401C: Regulatory Model 1AAW In-Sight 8402/8402C: Regulatory Model 1AAW In-Sight 8405: Regulatory Model 1AAU
FCC	FCC Part 15, Class A This device complies with Part 15 of the FCC Rules. Operation is subject to the following two conditions: (1) this device may not cause harmful interference; and (2) this device must accept any interference received, including interference that may cause undesired operation. This equipment generates, uses, and can radiate radio frequency energy and, if not installed and used in accordance with the instruction manual, may cause harmful interference to radio communications. Operation of this equipment in a residential area is likely to cause harmful interference in which case the user will be required to correct the interference at their own expense.
KCC	In-Sight 8200/8200C: Regulatory Model 1AAW: MSIP-REM-CGX-1AAW In-Sight 8400/8400C: Regulatory Model 1AAW: MSIP-REM-CGX-1AAW In-Sight 8401/8401C: Regulatory Model 1AAW: MSIP-REM-CGX-1AAW In-Sight 8402/8402C: Regulatory Model 1AAW: MSIP-REM-CGX-1AAW In-Sight 8405: Regulatory Model 1AAU: MSIP-REM-CGX-1AAU
NRTL	TÜV SÜD AM SCC/NRTL OSHA Scheme for UL/CAN 61010-1.
CB	TÜV SÜD AM, IEC/EN 61010-1. CB report available upon request.
RoHS	Compliant to the latest applicable Directive.

China RoHS

	Hazardous Substances 有害物质					
Part Name 部件名称	Lead (Pb) 铅	Mercury (Hg) 汞	Cadmium (Cd) 镉	Hexavalent Chromium (Cr (VI)) 六价铬	Polybrominated biphenyls (PBB) 多溴联苯	Polybrominated diphenyl ethers (PBDE) 多溴二苯醚
Regulatory Model 1AAU Regulatory Model 1AAW	X	O	O	O	O	O

This table is prepared in accordance with the provisions of SJ/T 11364.
这个标签是根据SJ / T 11364 的规定准备的。

O: Indicates that said hazardous substance contained in all of the homogeneous materials for this part is below the limit requirement of GB / T26572 - 2011.
表示本部件所有均质材料中含有的有害物质低于GB / T26572 - 2011 的限量要求。

X: Indicates that said hazardous substance contained in at least one of the homogeneous materials used for this part is above the limit requirement of GB / T26572 - 2011.
表示用于本部件的至少一种均质材料中所含的危害物质超过GB / T26572 - 2011 的限制要求。

For European Community Users

Cognex complies with Directive 2012/19/EU OF THE EUROPEAN PARLIAMENT AND OF THE COUNCIL of 4 July 2012 on waste electrical and electronic equipment (WEEE).

This product has required the extraction and use of natural resources for its production. It may contain hazardous substances that could impact health and the environment, if not properly disposed.

In order to avoid the dissemination of those substances in our environment and to diminish the pressure on the natural resources, we encourage you to use the appropriate take-back systems for product disposal. Those systems will reuse or recycle most of the materials of the product you are disposing in a sound way.

The crossed out wheeled bin symbol informs you that the product should not be disposed of along with municipal waste and invites you to use the appropriate separate take-back systems for product disposal.

If you need more information on the collection, reuse, and recycling systems, please contact your local or regional waste administration.

You may also contact your supplier for more information on the environmental performance of this product.

Precautions

To reduce the risk of injury or equipment damage when you install the Cognex product, observe the following precautions:

- An IEEE 802.3af compliant, and UL or NRTL listed, Power over Ethernet (PoE) power source rated Class 0, 2, 3 or 4 must be used. Any other voltage creates a risk of fire or shock and can damage the components. Applicable national and local wiring standards and rules must be followed.
- To reduce the risk of damage or malfunction due to over-voltage, line noise, electrostatic discharge (ESD), power surges, or other irregularities in the power supply, route all cables and wires away from high current wiring or high-voltage power sources.
- Do not install Cognex products where they are directly exposed to environmental hazards such as excessive heat, dust, moisture, humidity, impact, vibration, corrosive substances, flammable substances, or static electricity.
- Do not expose the image sensor to laser light; image sensors can be damaged by direct, or reflected, laser light. If your application requires the use of laser light that may strike the image sensor, a lens filter at the corresponding laser's wavelength is recommended. Contact your local integrator or application engineer for suggestions.
- The In-Sight vision system does not contain user-serviceable parts. Do not make electrical or mechanical modifications to In-Sight vision system components. Unauthorized modifications may void your warranty.
- Changes or modifications not expressly approved by the party responsible for regulatory compliance could void the user’s authority to operate the equipment.
- Service loops should be included with all cable connections.
- Cable shielding can be degraded or cables can be damaged or wear out more quickly if a service loop or bend radius is tighter than 10X the cable diameter. The bend radius must begin at least six inches from the connector.
- This device is certified for office use only and if used at home, there can be frequency interference problems.
- This device should be used in accordance with the instructions in this manual.
- All specifications are for reference purpose only and may be changed without notice.

Table of Contents

Legal Notices **2**

Regulations/Conformity **3**

China RoHS 4

For European Community Users 4

Precautions **5**

Table of Contents **6**

Symbols **8**

Introduction **9**

Support 9

Standard Components 9

Accessories 10

Cables 10

Mounting Block Kit 12

CIO-MICRO I/O Module 12

Connectors and Indicators 13

Installation **14**

Mount the Vision System 14

Install the Lens 15

Connect the Inputs and Outputs (Optional) 16

Option 1: Connect the Breakout Cable 16

Option 2: Connect the I/O Module Cable 17

Connect the Ethernet and Power 18

Connect the Power Wires 18

Connect the Frame Ground Wire 19

Connect an RJ-45 LAN Cable 20

Connect the Ethernet Cable 20

Specifications **22**

8200 and 8400 Series Vision System Specifications 22

8405 Vision System Specifications 24

Acquisition Trigger Input 26

High-Speed Outputs 27

High-Speed Output - NPN Configuration 28

High-Speed Output - PNP Configuration 28

High-Speed Output - Relay/LED Configuration 29

Breakout Cable Specifications 30

I/O Module Cable Specifications 31

Ethernet Cable Specifications (8200 and 8400 Series) 32

Ethernet Cable Specifications (8405) 33

Dimensions 34

8200 and 8400 Series Vision System 34

8200 and 8400 Series Vision System with Mounting Block (BKT-IS8K-01) 35

8405 Vision System 36

8405 Vision System with Mounting Block (BKT-IS8K-01) 37

Cleaning/Maintenance **38**
Clean the Housing 38
Clean the Vision System Image Sensor Window 38
Clean the Cover 38

Symbols

The following symbols indicate safety precautions and supplemental information.

WARNING: This symbol indicates the presence of a hazard that could result in death, serious personal injury or electrical shock.

CAUTION: This symbol indicates the presence of a hazard that could result in property damage.

Note: Notes provide supplemental information about a subject.

Tip: Tips provide helpful suggestions and shortcuts that may not otherwise be apparent.

Introduction

The In-Sight® vision system is a compact, network-ready, stand-alone machine vision system used for automated inspection, measurement, identification and robot guidance applications on the factory floor. All models can be easily configured remotely over a network using an intuitive user interface.

Support

Many information resources are available to assist you in using the vision system:

- The *In-Sight® Explorer Help* and *EasyBuilder Help* files, provided with In-Sight Explorer software.
- On-demand training: http://www.cognex.com/on-demand-training.aspx.
- The In-Sight online support site: http://www.cognex.com/Support/InSight.

Standard Components

Note:
- Cables are sold separately.
- If any of the standard components appear to be missing or damaged, immediately contact your Cognex Authorized Service Provider (ASP) or Cognex Technical Support.

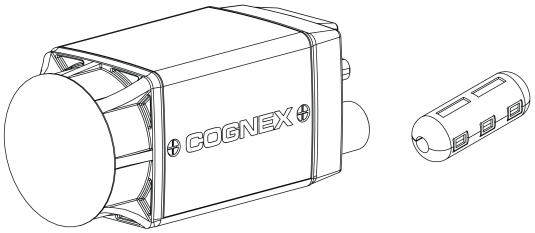

Component	Description
Vision System	Provides image acquisition, vision processing, job storage, Ethernet connectivity and discrete I/O.
Ferrite	Ferrite included for attachment to the accessory Breakout cable or I/O Module cable. **Note**: The ferrite is only included with the In-Sight 8405 vision system.

Accessories

The following components can be purchased separately. For a complete list of options and accessories, contact your local Cognex sales representative.

Cables

Note: Cables are sold separately.

CAUTION: All cable connectors are “keyed” to fit the connectors on the vision system; do not force the connections or damage may occur.

Breakout Cable

The Breakout cable provides access to the vision system’s trigger and high-speed outputs. The Breakout cable can be connected to devices, such as a PLC, trigger sensor or strobe light. The Breakout cable is not terminated. The pin-outs for the cable are listed in the *Breakout Cable Specifications* on page 30.

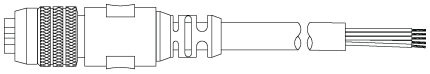

M8 Connector

Length	Part Number
0.6m	CCB-M8IO-00
2m	CCB-M8IO-02
5m	CCB-M8IO-05
10m	CCB-M8IO-10
15m	CCB-M8IO-15

I/O Module Cable

The I/O Module cable is used with the CIO-MICRO. The I/O Module cable connects the vision system directly to the I/O module via the DB15 connector. When connected, the I/O Module cable provides access to the vision system’s trigger and high-speed outputs. The pin-outs for the cable are listed in the *I/O Module Cable Specifications* on page 31. This cable is available in the lengths listed below.

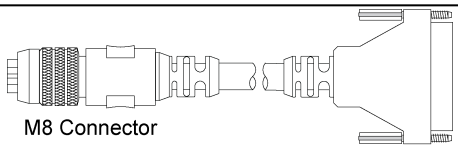

M8 Connector

DB15 Connector

Length	Part #
0.7 m	CCB-M8DSIO-00
2 m	CCB-M8DSIO-02
5 m	CCB-M8DSIO-05
10 m	CCB-M8DSIO-10
15 m	CCB-M8DSIO-15

Ethernet Cable (8200 and 8400 Series)

The Ethernet cable provides Ethernet connectivity and supplies power to the vision system. The pin-outs for the cable are listed in the *Ethernet Cable Specifications (8200 and 8400 Series)* on page 32.

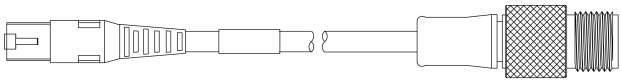

Length	Part Number
2m	CCB-84901-2001-02
5m	CCB-84901-2001-05
10m	CCB-84901-2001-10
15m	CCB-84901-2001-15

Ethernet Cable (8405)

The Ethernet cable provides Ethernet connectivity and supplies power to the vision system. The pin-outs for the cable are listed in the *Ethernet Cable Specifications (8405)* on page 33.

Length	Part Number
5m	CGE-CBL-SHLD-5M
10m	CGE-CBL-SHLD-10M
20m	CGE-CBL-SHLD-20M

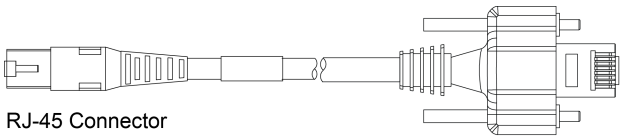

Length	Part Number
5m	CGE-CBL-FLEX-H-5M
10m	CGE-CBL-FLEX-H-10M
20m	CGE-CBL-FLEX-H-20M

Mounting Block Kit

The mounting block kit includes M3 screws for mounting the vision system (quantity 4) and a mounting block for securing the vision system to a mounting surface.

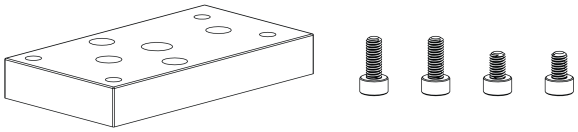

Description	Part Number
Mounting kit and M3 screws	BKT-IS8K-01

CIO-MICRO I/O Module

The CIO-MICRO I/O module provides access to power, serial, trigger, high-speed outputs and additional discrete inputs and discrete outputs.

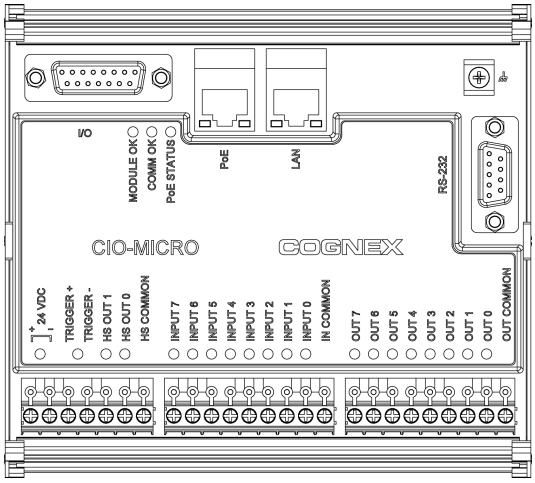

Description	Part Number
CIO-MICRO I/O Module	CIO-MICRO-00

Note:

- The CIO-MICRO I/O module supports In-Sight 8000 series vision systems with firmware version 5.3.0 and higher.
- The CIO-MICRO I/O module does not support 1000 BaseT pass-through operation. If 1000 BaseT operation is required, you must connect an RJ-45 LAN cable from a Gigabit PoE switch to the I/O module's LAN port and connect the vision system's Ethernet cable to the Gigabit PoE switch.

Connectors and Indicators

In-Sight 8200 and 8400 Series	In-Sight 8405
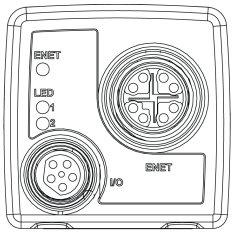	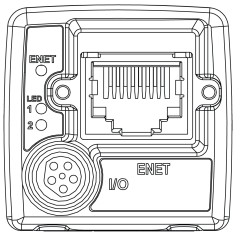

Connector/Indicator	Description
ENET LED	• 1000-BaseT: LED turns on when the vision system is receiving power during startup, and blinks green once network traffic is detected. • 100-BaseT: LED turns on when the vision system is receiving power during startup, and blinks green and red (appears orange) once network traffic is detected. • 10-BaseT: LED turns on when the vision system is receiving power during startup, and blinks red once network traffic is detected.
LED 1	Green when active. User-configurable within the In-Sight Explorer Discrete I/O Settings dialog, using Output Line 4.
LED 2	Red when active. User-configurable within the In-Sight Explorer Discrete I/O Settings dialog, using Output Line 5.
I/O Port	The I/O port is an M8 port that provides connection to the acquisition trigger input and high-speed outputs via the Breakout cable or I/O Module cable. For more information, refer to *Breakout Cable Specifications* on page 30 and *I/O Module Cable Specifications* on page 31.
ENET Port	The ENET port is a 10/100/1000 port that provides Gigabit Ethernet connectivity and supplies Power over Ethernet (PoE) via the Ethernet cable. For more information, refer to *Ethernet Cable Specifications (8200 and 8400 Series)* on page 32 and *Ethernet Cable Specifications (8405)* on page 33.

Note:

- When initially powered up, the ENET LED turns on and is orange and LED 1 turns on and is steady green for approximately 10 seconds. Next, LED 2 flashes green and then red, and then both LED 1 and LED 2 turn off. Next, the ENET LED turns off and then momentarily flashes when a network connection is established, and then begins blinking once network traffic is detected.
- If both LED 1 and LED 2 are solid red, the vision system's firmware update was interrupted. For more information, refer to the Update Firmware Dialog topic in the *In-Sight® Explorer Help* file.

Installation

This section describes the connection of the vision system to its standard components and accessories. For a complete list of options and accessories, contact your Cognex sales representative.

Note: Cables are sold separately.

CAUTION: All cable connectors are “keyed” to fit the connectors on the vision system; do not force the connections or damage may occur.

Mount the Vision System

Note:

- For the mounting holes closest to the lens opening, the thread length of the M3 screw should not exceed 4.5mm. For the mounting holes closest to the connectors, the thread length of the M3 screw should not exceed 1.6mm. This does not include the thickness of the mounting material used. For more information, refer to *8200 and 8400 Series Vision System* on page 34 and *8405 Vision System* on page 36.
- The accessory mounting kit includes a mounting block and M3 screws (quantity 4) for mounting the vision system and securing it to a mounting surface. The mounting block also provides 1/4-20 and M6 mounting holes for attaching the vision system to a mounting surface. For more information, refer to *8200 and 8400 Series Vision System with Mounting Block (BKT-IS8K-01)* on page 35 and *8405 Vision System with Mounting Block (BKT-IS8K-01)* on page 37.
- It is recommended that the vision system be grounded, either by mounting the vision system to a fixture that is electrically grounded or by attaching a wire from the vision system's mounting fixture to frame ground or Earth ground.

1. Align the holes on the mounting surface with the mounting holes on the vision system.
2. Insert the M3 screws into the mounting holes and tighten using a 2.5mm hex wrench; the maximum torque is 0.3 Nm (2.5 in-lb).

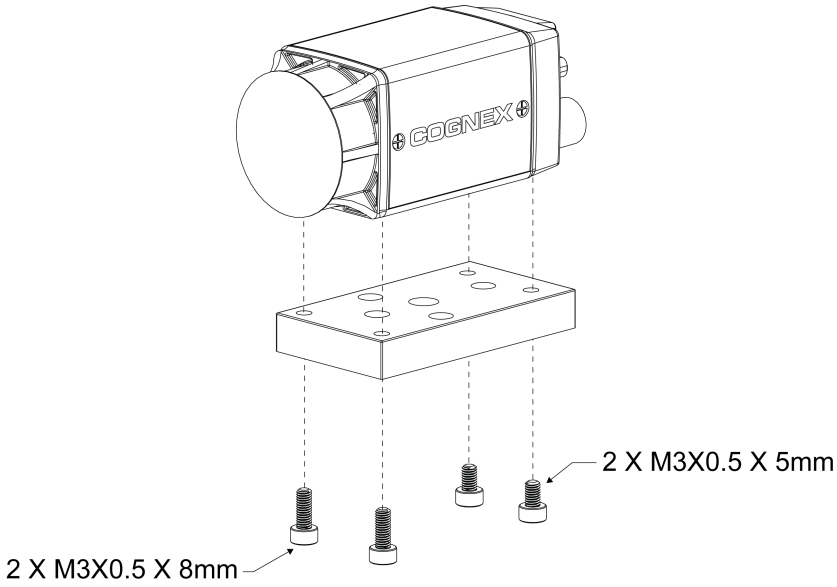

Install the Lens

1. Remove the protective film covering the threaded lens opening, if present.
2. Attach a C-Mount lens to the vision system. The exact lens focal length needed depends on the working distance and the field of view required for your machine vision application.

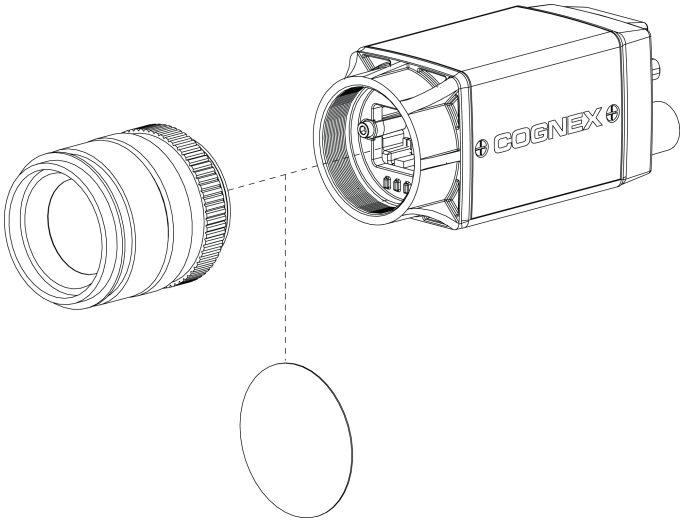

Connect the Inputs and Outputs (Optional)

The vision system's I/O connector supplies connections for the acquisition trigger and high-speed outputs.

Note: The vision system must be Online for the discrete inputs and outputs to function. Refer to the *In-Sight® Explorer Help* file for details on configuring the discrete input and output lines.

Option 1: Connect the Breakout Cable

CAUTION: A ferrite is included with the In-Sight 8405 vision system standard components. To reduce emissions, the ferrite must be attached to the Breakout cable.

Note:

- I/O wiring or adjustments to I/O devices should be performed when the vision system is not receiving power.
- The Ethernet cable should be unplugged, or the PoE source powered down before making adjustments to the connections at the far end of the Breakout cable.
- Unused wires can be clipped short or tied back using a tie made of non-conductive material.

1. If installing the In-Sight 8405 vision system, attach the ferrite around the Breakout cable, adjacent to the strain relief on the cable.

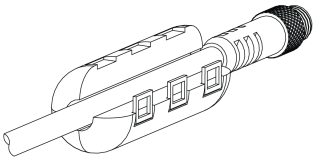

2. Connect the Breakout cable's M8 connector to the vision system's I/O connector.
3. Connect the trigger and high-speed I/O wires to an appropriate device (for example, a PLC, trigger sensor or strobe light). For more information, refer to *Breakout Cable Specifications* on page 30.

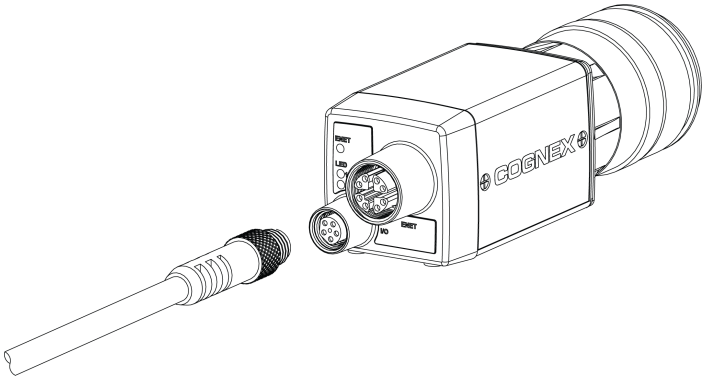

Option 2: Connect the I/O Module Cable

CAUTION: A ferrite is included with the In-Sight 8405 vision system standard components. To reduce emissions, the ferrite must be attached to the I/O Module cable.

Note:

- The CIO-MICRO I/O module supports In-Sight 8000 series vision systems with firmware version 5.3.0 and higher.
- I/O wiring or adjustments to I/O devices should be performed when the vision system is not receiving power.

1. If installing the In-Sight 8405 vision system, attach the ferrite around the I/O Module cable, adjacent to the strain relief on the cable.

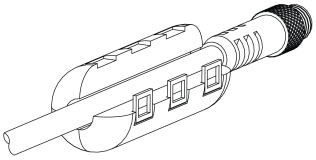

2. Connect the I/O Module cable's M8 connector to the vision system's I/O connector.

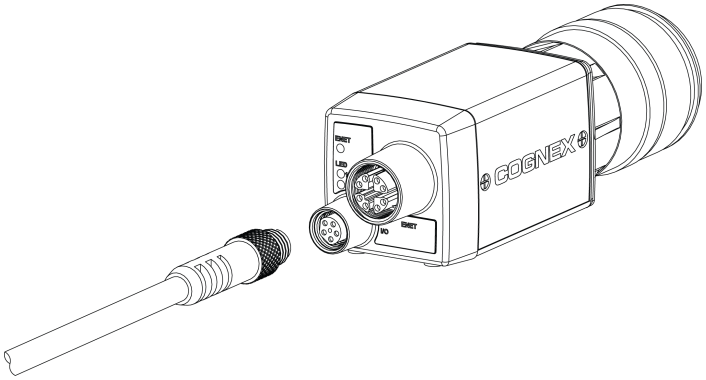

3. Connect the I/O Module cable's DB15 connector to the I/O module's I/O connector.

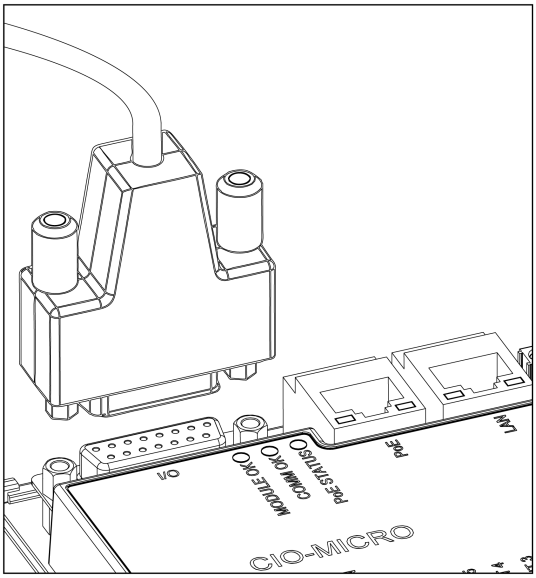

4. Restore power to the 24VDC power supply and turn it on if necessary.

Connect the Ethernet and Power

The vision system's PoE connector provides the Ethernet connection for network communications and supplies power to the vision system. The following steps illustrate how to connect the vision system to the In-Sight CIO-MICRO I/O module. If the CIO-MICRO I/O module is not used, a third-party PoE injector or a PoE switch must be used to supply power to the vision system.

Note: The CIO-MICRO I/O module does not support 1000 BaseT pass-through operation. If 1000 BaseT operation is required, you must connect an RJ-45 LAN cable from a Gigabit PoE switch to the I/O module's LAN port and connect the vision system's Ethernet cable to the Gigabit PoE switch.

Connect the Power Wires

CAUTION: Never connect the I/O module to a power source other than 24VDC. Any other voltage creates a risk of fire or shock and can damage the hardware. Do not connect the 24VDC power source to any terminals other than the 24VDC + and – power terminals.

1. Verify that the 24VDC power supply being used is unplugged and not receiving power.
2. Use a screwdriver to loosen the I/O module's power terminals (labeled 24VDC + and –).
3. Insert the 24VDC + and – wires (16 - 22 AWG, solid or stranded wire) from the power supply into the 24VDC + and – terminals on the I/O module.
4. Tighten the screw terminals with the screwdriver to secure the wire leads in the terminal block; the maximum torque is 0.1921 Nm (1.7 in-lb).

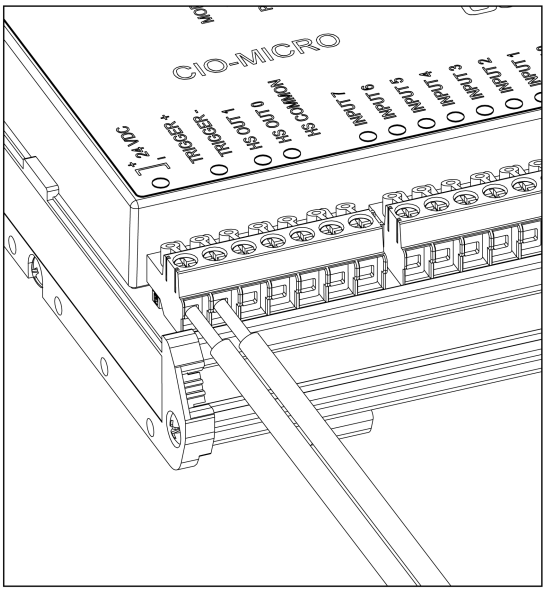

Connect the Frame Ground Wire

Connect a frame ground wire to the I/O module's Frame Ground terminal. Connect the other end of the frame ground wire to frame ground.

CAUTION: The shield ground connections of the RS-232 port, LAN port, PoE port, I/O port and Frame Ground terminal are internally connected. The system grounding is designed to be at a zero ground potential; this zero ground potential extends through the cable and to peripheral equipment (e.g. a vision system, PLC, etc.). To ensure safe operating conditions, it is strongly recommended that all ground connections are checked to ensure that a zero ground potential is met.

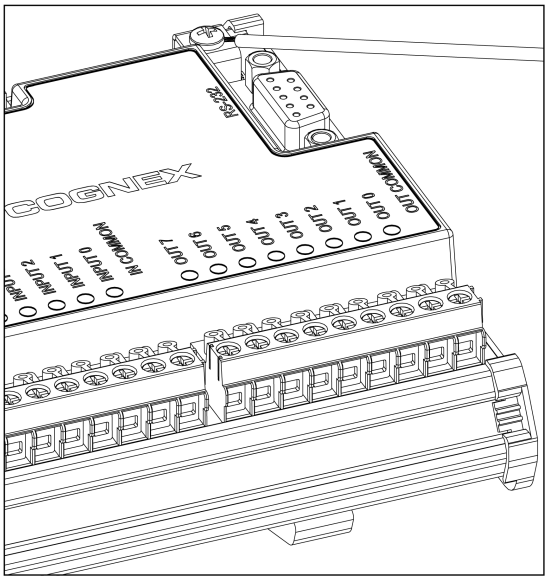

Connect an RJ-45 LAN Cable

To connect the vision system to an Ethernet network, plug a LAN cable (RJ-45 connector) into the I/O module's LAN port and connect the other end of the cable to a switch/router or PC, as applicable.

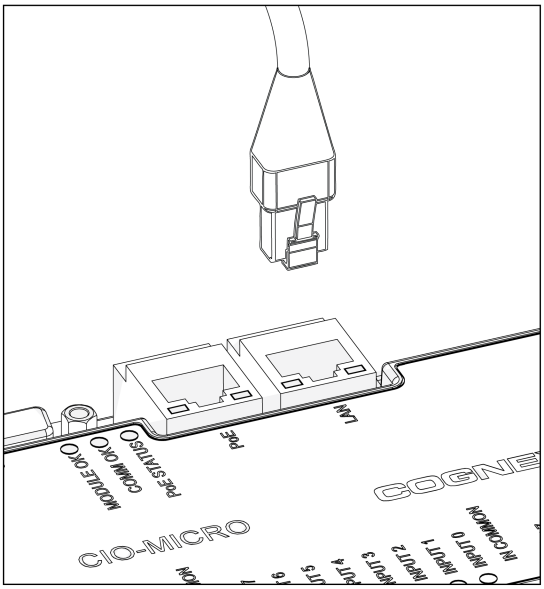

Connect the Ethernet Cable

CAUTION:

- The Ethernet cable must be shielded. For the In-Sight 8405 vision system, Cognex strongly recommends Cat 6 or Cat 7 Ethernet cables with S/STP shielding.
- The Ethernet cable shield must be grounded at the far end. If using a PoE injector, a ground wire should be connected from the Ethernet shield at the PoE injector to frame ground or Earth ground, and a digital voltmeter used to validate the grounding. If using a PoE switch, it should have a metal case, with the case grounded to frame ground or Earth ground.
- The I/O module's PoE port provides power and Ethernet connectivity to the In-Sight 8000 series vision system. Connecting third-party devices to the I/O module's PoE port could damage the I/O module.

1. Connect the Ethernet cable's M12 connector to the vision system's ENET connector.

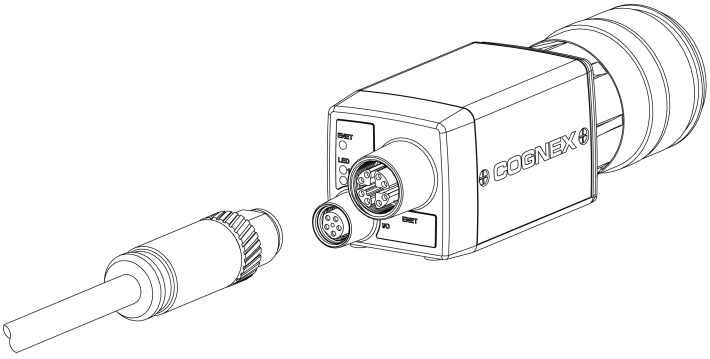

If installing the In-Sight 8405 vision system and using a compatible horizontal screw-locking Ethernet cable, use a screw driver to tighten the connector screws until snug, to secure it to the vision system. The screws must be tight to ensure a reliable connection.

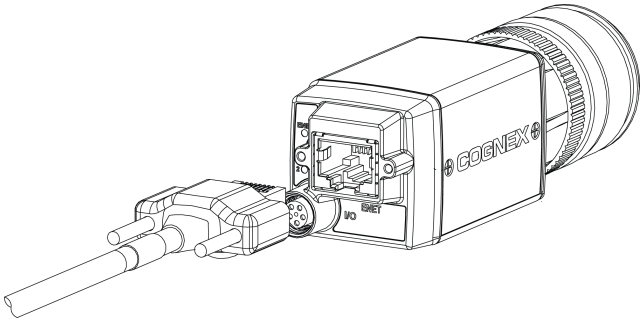

2. Connect the Ethernet cable's RJ-45 connector to the I/O module's PoE port.

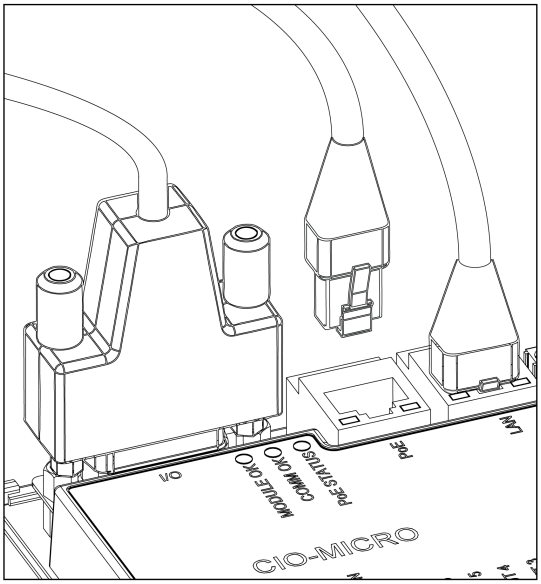

3. Restore power to the I/O module's 24VDC power supply and turn it on if necessary.

Specifications

The following sections list general specifications for the vision system.

8200 and 8400 Series Vision System Specifications

Specifications	8200	8200C	8400	8400C	8401	8401C	8402	8402C
Minimum Firmware Requirement	In-Sight version 5.2.0	In-Sight version 5.5.0	In-Sight version 5.2.0	In-Sight version 5.5.0	In-Sight version 5.2.0	In-Sight version 5.5.0	In-Sight version 5.2.0	In-Sight version 5.5.0
Job/Program Memory	512MB non-volatile flash memory; unlimited storage via remote network device.							
Image Processing Memory	512MB SDRAM							
Sensor Type	1/1.8 inch CMOS, global shutter							
Sensor Properties	3.6mm diagonal, 4.5 x 4.5µm sq. pixels				7.38mm diagonal, 4.5 x 4.5µm sq. pixels		9mm diagonal, 4.5 x 4.5µm sq. pixels	
Maximum Resolution (pixels)[1]	640 x 480				1280 x 1024		1600 x 1200	
Electronic Shutter Speed	14µs to 520ms				17.4µs to 750ms		20µs to 940ms	
Acquisition	Rapid reset, progressive scan, full-frame integration.							
Bit Depth	256 grey levels (8 bits/pixel)	24-bit color	256 grey levels (8 bits/pixel)	24-bit color	256 grey levels (8 bits/pixel)	24-bit color	256 grey levels (8 bits/pixel)	24-bit color
Frames Per Second (FPS)[2]	217 FPS	135 FPS	217 FPS	135 FPS	76 FPS	45 FPS	53 FPS	33 full frames per second.
Lens Type	C-Mount							
Trigger	1 opto-isolated, acquisition trigger input. Remote software commands via Ethernet. (RS-232C available when using the optional CIO-MICRO I/O module.)							
Discrete Inputs	None. (Eight additional general-purpose inputs available when using the optional CIO-MICRO I/O module.)							
Discrete Outputs	2 opto-isolated, NPN/PNP high-speed output lines. (Eight additional general-purpose outputs available when using the optional CIO-MICRO I/O module.)							
Status LEDs	Network, 2 user-configurable.							
Network Communication	1 Ethernet port, 10/100/1000 BaseT with auto MDIX. IEEE 802.3af TCP/IP Protocol. Supports DHCP (factory default), static and link-local IP address configuration.							
Serial Communication	None. (RS-232C: 4800 to 115,200 baud rates when connected to the optional CIO-MICRO I/O module.)							
Power	Class 2 Power over Ethernet (PoE) device.							
Power Type	PoE Type A and Type B.							
Power Consumption	6.49 W maximum per Class 2 PoE.							
Current	Per Class 2 PoE requirements.							

[1] The number of image sensor rows are configurable and can be set within the In-Sight Explorer software. Decreasing the number of rows will increase the number of frames per second acquired by the vision system. Refer to the AcquireImage topic in the *In-Sight® Explorer Help* file for more information.

[2] Maximum frames per second is job-dependent, based on the minimum exposure for a full image frame capture using the dedicated acquisition trigger, and assumes there is no user interface connection to the vision system.

Specifications	8200	8200C	8400	8400C	8401	8401C	8402	8402C
Voltage	48VDC nominal, applied from a Class 2 PoE device, which is typically powered from some other voltage.							
Material	Die-cast zinc housing.							
Finish	Painted.							
Mounting	Four M3 threaded mounting holes (1/4-20 and M6 mounting holes also available on accessory mounting block).							
Dimensions	31.0mm (1.22in) x 31.2mm (1.23in) x 75.1mm (2.96in) without accessory mounting block. 39.0mm (1.54in) 31.2mm (1.23in) x 75.1mm (2.96in) with accessory mounting block.							
Weight	132.2 g (4.66 oz.) without accessory mounting block. 163.2 g (5.76 oz.) with accessory mounting block.							
Case Temperature[1]	0°C to 50°C (32°F to 122°F)							
Storage Temperature	-20°C to 80°C (-4°F to 176°F)							
Humidity	< 80% non-condensing							
Protection	IP40 with cables and lens attached.							
Shock (Shipping and Storage)	IEC 60068-2-27: 18 shocks (3 shocks in each polarity in each (X, Y, Z) axis) 80 Gs (800m/s^2 at 11ms, half-sinusoidal)							
Vibration (Shipping and Storage)	IEC 60068-2-6: vibration test in each of the three main axis for 2 hours @ 10 Gs (10 to 500 Hz at 100m/s^2 / 15mm)							
Regulations/Conformity	CE, FCC, KCC, TÜV SÜD NRTL, EU RoHS, China RoHS							

[1] Case temperature can be verified using the EV GetSystemConfig("Internal.Temperature") Extended Native Mode command. When issued, it returns the vision system's internal temperature in degrees Celsius, which will be ±5 degrees above the vision system case temperature. Refer to the *In-Sight® Explorer Help* file for more information. Additional cooling measures are required if the case temperature cannot be kept below 50°C. Examples of such measures include: mounting the vision system to a heat sink using the M3 mounting screws, reducing the ambient temperature and ensuring there is air flow over the vision system.

8405 Vision System Specifications

Specifications	8405
Minimum Firmware Requirement	In-Sight version 5.1.1
Job/Program Memory	512MB non-volatile flash memory; unlimited storage via remote network device.
Image Processing Memory	512MB SDRAM
Sensor Type	1/2.5 inch CMOS, rolling shutter
Sensor Properties	7.13mm diagonal, 2.2 x 2.2µm sq. pixels
Maximum Resolution (pixels)[1]	2592 x 1944
Electronic Shutter Speed	32µs to 1000ms
Acquisition	Rapid reset, progressive scan, full-frame integration.
Bit Depth	256 grey levels (8 bits/pixel)
Frames Per Second (FPS)[2]	13 FPS
Lens Type	C-Mount
Trigger	1 opto-isolated, acquisition trigger input. Remote software commands via Ethernet. (RS-232C available when using the optional CIO-MICRO I/O module.)
Discrete Inputs	None. (Eight additional general-purpose inputs available when using the optional CIO-MICRO I/O module.)
Discrete Outputs	2 opto-isolated, NPN/PNP high-speed output lines. (Eight additional general-purpose outputs available when using the optional CIO-MICRO I/O module.)
Status LEDs	Network, 2 user-configurable.
Network Communication	1 Ethernet port, 10/100/1000 BaseT with auto MDIX. IEEE 802.3af TCP/IP Protocol. Supports DHCP (factory default), static and link-local IP address configuration.
Serial Communication	None. (RS-232C: 4800 to 115,200 baud rates when connected to the optional CIO-MICRO I/O module.)
Power	Class 2 Power over Ethernet (PoE) device.
Power Type	PoE Type A and Type B.
Power Consumption	6.49 W maximum per Class 2 PoE.
Current	Per Class 2 PoE requirements.
Voltage	48VDC nominal, applied from a Class 2 PoE device, which is typically powered from some other voltage.
Material	Die-cast zinc housing.
Finish	Painted.
Mounting	Four M3 threaded mounting holes (1/4-20 and M6 mounting holes also available on accessory mounting block).
Dimensions	31.0mm (1.22in) x 31.2mm (1.23in) x 71.6mm (2.82in) without accessory mounting block. 39.0mm (1.54in) x 31.2mm (1.23in) x 71.6mm (2.82in) with accessory mounting block.

[1] The number of image sensor rows are configurable and can be set within the In-Sight Explorer software. Decreasing the number of rows will increase the number of frames per second acquired by the vision system. Refer to the AcquireImage topic in the *In-Sight® Explorer Help* file for more information.

[2] Maximum frames per second is job-dependent, based on the minimum exposure for a full image frame capture using the dedicated acquisition trigger, and assumes there is no user interface connection to the vision system.

Specifications	8405
Weight	78 g (2.75 oz.) without accessory mounting block. 109 g (3.84 oz.) with accessory mounting block.
Case Temperature[1]	0°C to 50°C (32°F to 122°F)
Storage Temperature	-20°C to 80°C (-4°F to 176°F)
Humidity	< 80% non-condensing
Protection	IP30 with cables and lens attached.
Shock (Shipping and Storage)	IEC 60068-2-27: 18 shocks (3 shocks in each polarity in each (X, Y, Z) axis) 80 Gs (800m/s^2 at 11ms, half-sinusoidal)
Vibration (Shipping and Storage)	IEC 60068-2-6: vibration test in each of the three main axis for 2 hours @ 10 Gs (10 to 500 Hz at 100m/s^2 / 15mm)
Regulations/Conformity	CE, FCC, KCC, TÜV SÜD NRTL, EU RoHS, China RoHS

[1] Case temperature can be verified using the EV GetSystemConfig("Internal.Temperature") Extended Native Mode command. When issued, it returns the vision system's internal temperature in degrees Celsius, which will be ±5 degrees above the vision system case temperature. Refer to the *In-Sight® Explorer Help* file for more information. Additional cooling measures are required if the case temperature cannot be kept below 50°C. Examples of such measures include: mounting the vision system to a heat sink using the M3 mounting screws, reducing the ambient temperature and ensuring there is air flow over the vision system.

Acquisition Trigger Input

The vision system features one acquisition trigger input, which is optically isolated. The acquisition trigger input can be configured to trigger from either an NPN (current sinking) or PNP (current sourcing) device.

Specification	Description
Voltage	ON: 20 to 28VDC (24VDC nominal) OFF: 0 to 3VDC (8VDC nominal threshold)
Current	ON: 1.9 to 3.0mA from 20 to 28V input. OFF: < 300µA for <3VDC input. Resistance: ~10 kOhms
Delay[1]	72µs maximum latency between leading edge of trigger and start of acquisition. Input pulse should be minimum of 1ms wide.

- The Breakout cable can be used to trigger from an NPN photoelectric sensor or PLC output. Connect TRIGGER+ to +24VDC and connect TRIGGER- to the output of the photoelectric sensor. When the output turns ON, it pulls TRIGGER- down to 0VDC, turning the opto-coupler ON. For more information, refer to *Breakout Cable Specifications* on page 30.
- The Breakout cable can also be used to trigger from a PNP photoelectric sensor or PLC output. Connect TRIGGER+ to the output of the photoelectric sensor and connect TRIGGER- to 0VDC. When the output turns ON, it pulls TRIGGER+ up to +24VDC, turning the opto-coupler ON. For more information, refer to *Breakout Cable Specifications* on page 30.

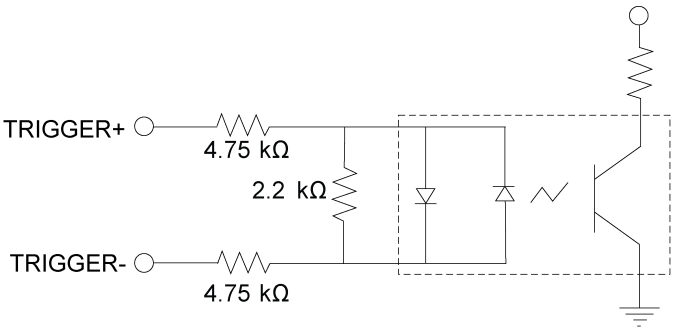

28VDC Max. Across input pins - Transition approx. 8VDC (Nom.)

[1] Maximum latency is based on a 1µs trigger debounce.

High-Speed Outputs

The vision system features two built-in, high-speed outputs, which are optically isolated. The high-speed outputs can be used as either NPN (current sinking) or PNP (current sourcing) lines.

Specification	Description
Voltage	28VDC maximum through external load.
Current	100mA maximum sink current.
	OFF state leakage current 100µA maximum.
	External load resistance 240 Ohms to 10 kOhms.
	Maximum 100mA, protected against over-current, short circuit and transients from switching inductive loads. High current inductive loads require an external protection diode.
Delay[1]	30µs (maximum due to opto-isolators turning ON).

For NPN lines, the external load should be connected between the output and the positive supply voltage (+24VDC nominal). HS COMMON should be connected to the negative supply voltage (0VDC). The outputs pull down to less than 3VDC when ON, which causes current to flow through the load. When the outputs are OFF, no current flows through the load.

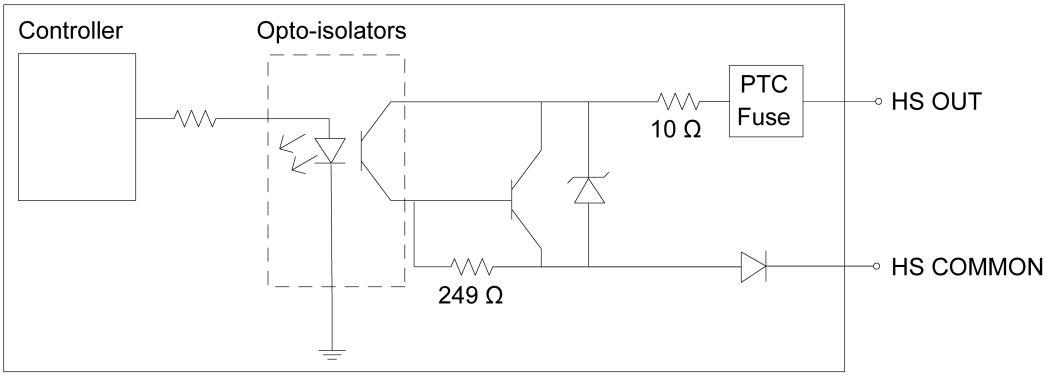

For PNP lines, the external load should be connected between the output and the negative supply voltage (0VDC). When HS COMMON is connected to the positive supply voltage (+24VDC nominal), the outputs pull up to greater than 21VDC when ON, and current flows through the load. When the outputs are OFF, no current flows through the load.

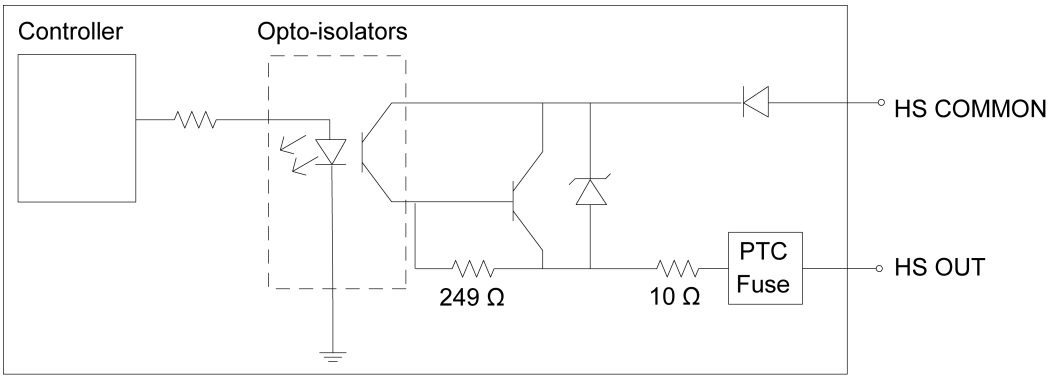

[1] Delay when opto-isolators turn OFF depends on the load to which the output is connected. With a 240 Ohm load, the maximum delay will be 35µs.

High-Speed Output - NPN Configuration

The Breakout cable can be used to connect to an NPN-compatible PLC input. Connect HS OUT 0 or HS OUT 1 directly to the PLC input. When enabled, the output pulls the PLC input down to less than 3VDC. For more information, refer to *Breakout Cable Specifications* on page 30.

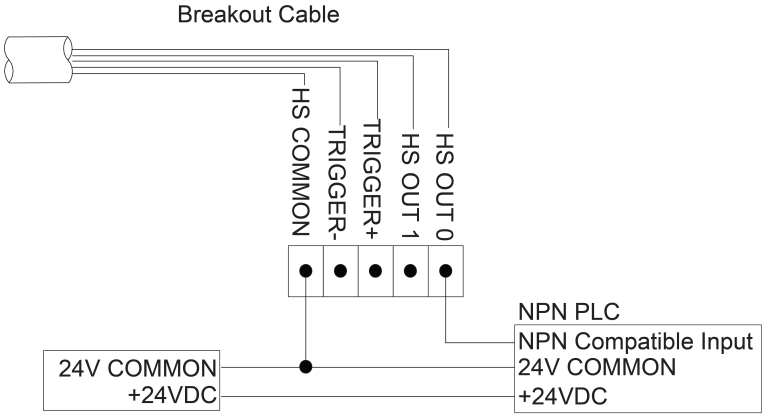

High-Speed Output - PNP Configuration

The Breakout cable can be used to connect to a PNP-compatible PLC input. Connect HS OUT 0 or HS OUT 1 directly to the PLC input. When enabled, the output pulls the PLC input up to greater than 21VDC. For more information, refer to *Breakout Cable Specifications* on page 30.

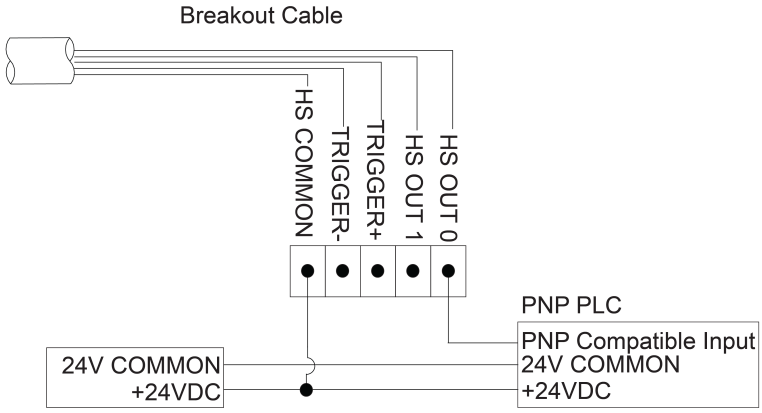

High-Speed Output - Relay/LED Configuration

The Breakout cable can be used to connect the high-speed outputs to a relay, LED or similar load. Connect the negative side of the load to the output and the positive side to +24VDC. When the output switches on, the negative side of the load is pulled down to less than 3VDC, and greater than 21VDC appears across the load. Use a protection diode for a large inductive load, with the anode connected to the output and the cathode connected to +24VDC. For more information, refer to *Breakout Cable Specifications* on page 30.

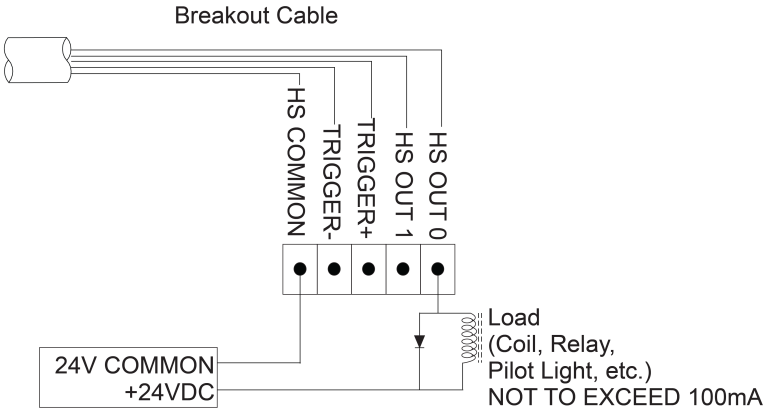

Breakout Cable Specifications

The Breakout cable provides access to the vision system's trigger and high-speed outputs. The Breakout cable can be connected to devices, such as a PLC, trigger sensor or strobe light. The Breakout cable is not terminated.

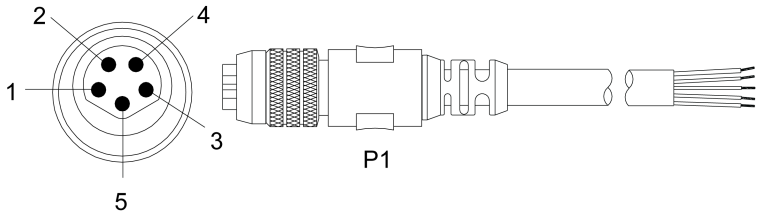

P1 Pin Number	Signal Name	Wire Color
1	HS OUT 0	Brown
2	HS OUT 1	White
3	TRIGGER+	Blue
4	TRIGGER-	Black
5	HS COMMON	Gray

Note:

- Cables are sold separately.
- Unused wires can be clipped short or tied back using a tie made of non-conductive material.

I/O Module Cable Specifications

The I/O Module cable is used with the CIO-MICRO. The I/O Module cable connects the vision system directly to the I/O module via the DB15 connector. When connected, the I/O Module cable provides access to the vision system's trigger and high-speed outputs.

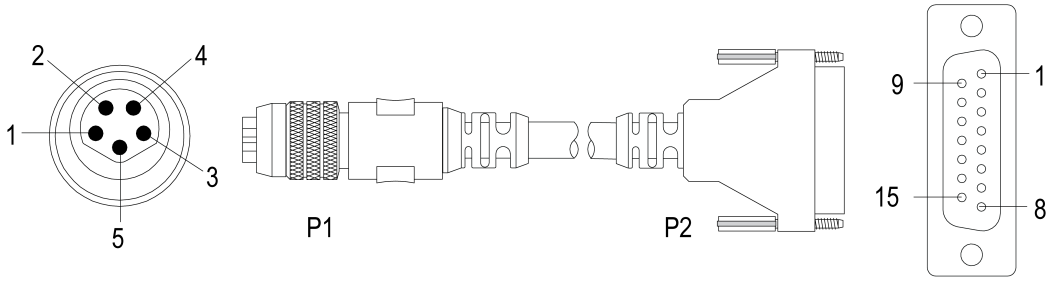

P1 Pin Number	Signal Name	P2 Pin Number
1	HS OUT 0	4
2	HS OUT 1	5
3	TRIGGER+	2
4	TRIGGER-	3
5	HS COMMON	15

Note: Cables are sold separately.

Ethernet Cable Specifications (8200 and 8400 Series)

The Ethernet cable provides Ethernet connectivity and supplies power to the vision system.

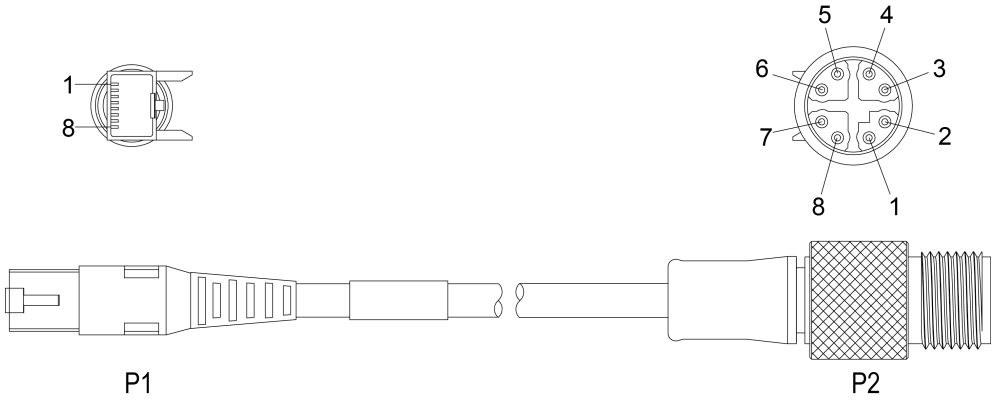

P1 Pin Number	Wire Color	Signal Name	P2 Pin Number
1	White/Orange	TxRx A +	1
2	Orange	TxRx A -	2
3	White/Green	TxRx B +	3
4	Blue	TxRx C +	8
5	White/Blue	TxRx C -	7
6	Green	TxRx B -	4
7	White/Brown	TxRx D +	5
8	Brown	TxRx D -	6

Note:

- Cables are sold separately.
- The wiring for this cable follows standard industrial Ethernet M12 specifications. This differs from the 568B standard.

CAUTION: The Ethernet cable shield must be grounded at the far end. If using a PoE injector, a ground wire should be connected from the Ethernet shield at the PoE injector to frame ground or Earth ground, and a digital voltmeter used to validate the grounding. If using a PoE switch, it should have a metal case, with the case grounded to frame ground or Earth ground.

Ethernet Cable Specifications (8405)

The Ethernet cable provides Ethernet connectivity and supplies power to the vision system.

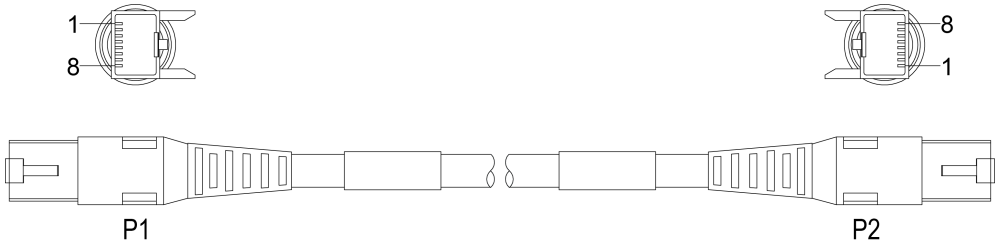

P1 Pin Number	Wire Color	Signal Name	P2 Pin Number
1	White/Orange	TxRx A +	1
2	Orange	TxRx A -	2
3	White/Green	TxRx B +	3
4	Blue	TxRx C +	4
5	White/Blue	TxRx C -	5
6	Green	TxRx B -	6
7	White/Brown	TxRx D +	7
8	Brown	TxRx D -	8

Note: Cables are sold separately.

CAUTION:

- The Ethernet cable must be shielded. For the In-Sight 8405 vision system, Cognex strongly recommends Cat 6 or Cat 7 Ethernet cables with S/STP shielding.
- The Ethernet cable shield must be grounded at the far end. If using a PoE injector, a ground wire should be connected from the Ethernet shield at the PoE injector to frame ground or Earth ground, and a digital voltmeter used to validate the grounding. If using a PoE switch, it should have a metal case, with the case grounded to frame ground or Earth ground.

Dimensions

The following sections list dimensions of the vision system and optional accessories.

8200 and 8400 Series Vision System

Note:

- All dimensions are in millimeters [inches] and are for reference purposes only.
- All specifications are for reference purpose only and may be changed without notice.

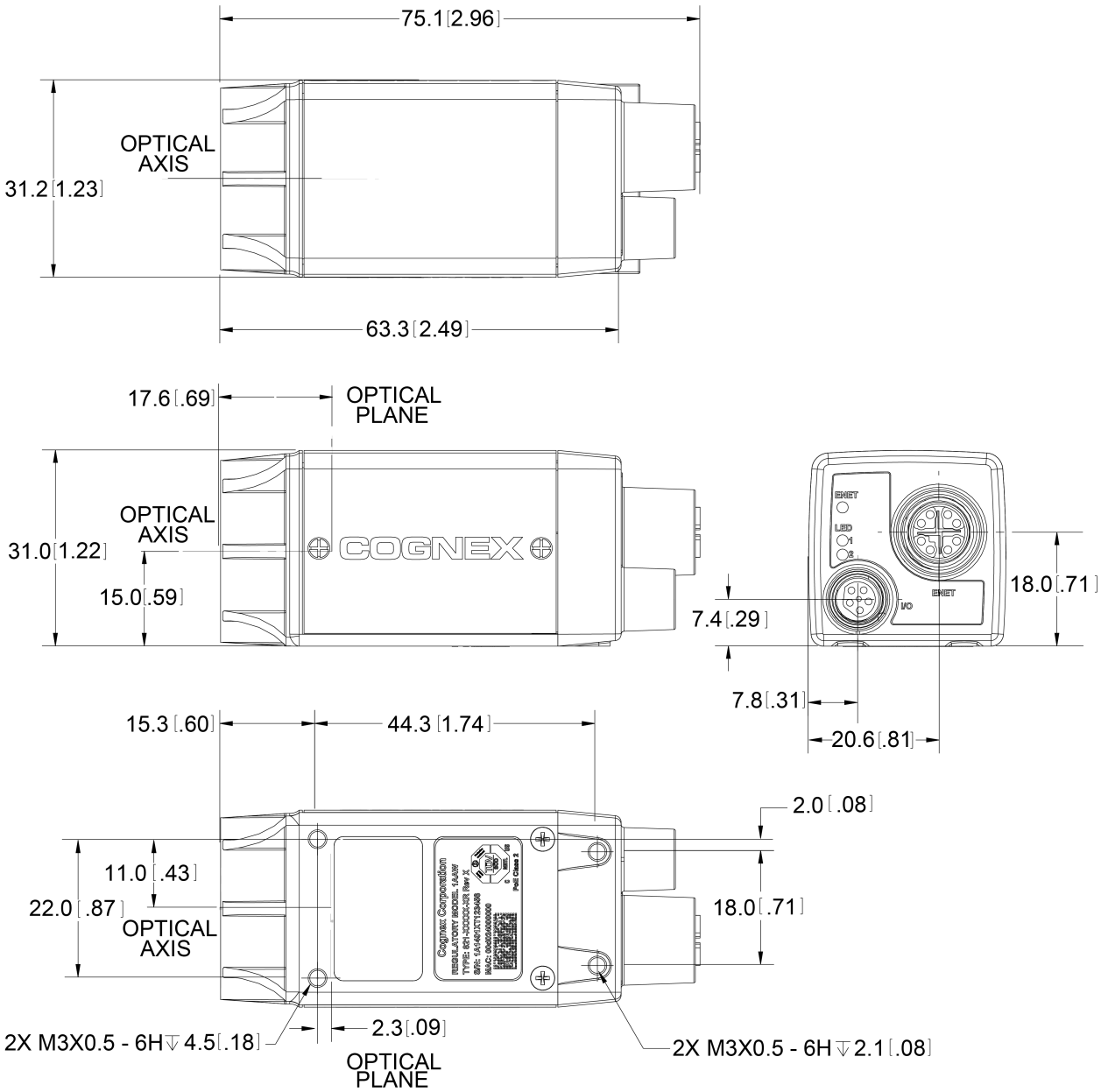

8200 and 8400 Series Vision System with Mounting Block (BKT-IS8K-01)

Note:

- All dimensions are in millimeters [inches] and are for reference purposes only.
- All specifications are for reference purpose only and may be changed without notice.

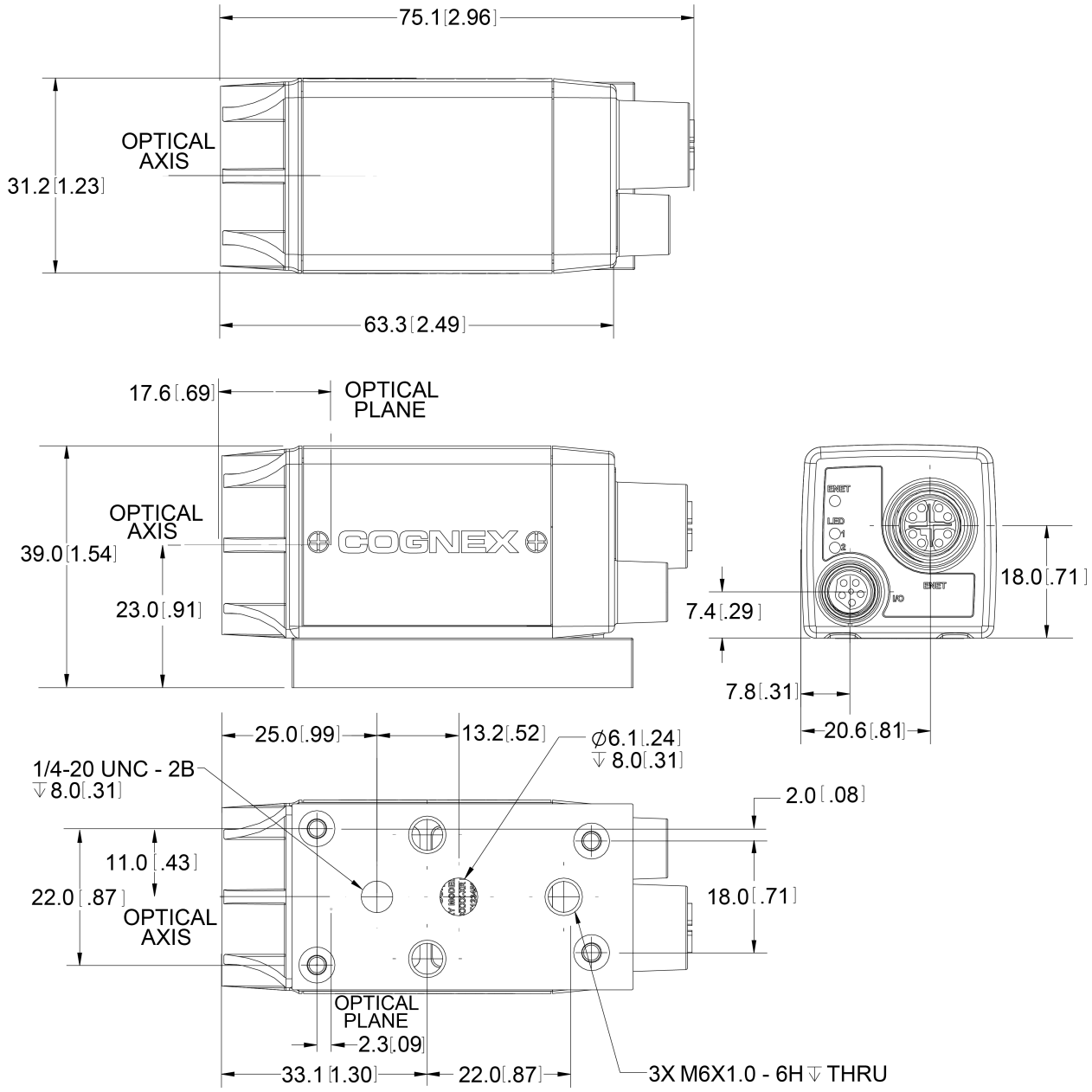

8405 Vision System

Note:

- All dimensions are in millimeters [inches] and are for reference purposes only.
- All specifications are for reference purpose only and may be changed without notice.

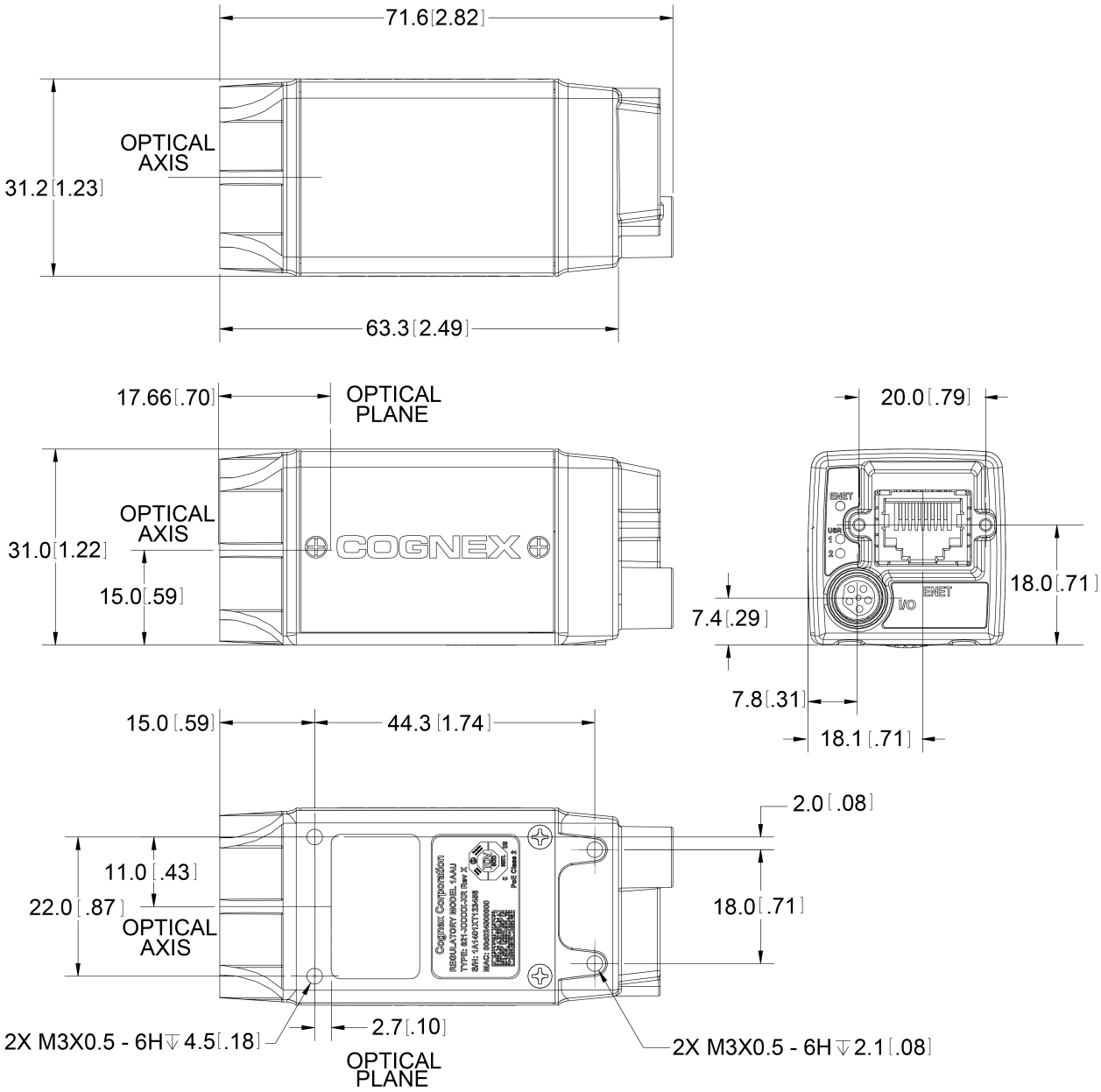

8405 Vision System with Mounting Block (BKT-IS8K-01)

Note:

- All dimensions are in millimeters [inches] and are for reference purposes only.
- All specifications are for reference purpose only and may be changed without notice.

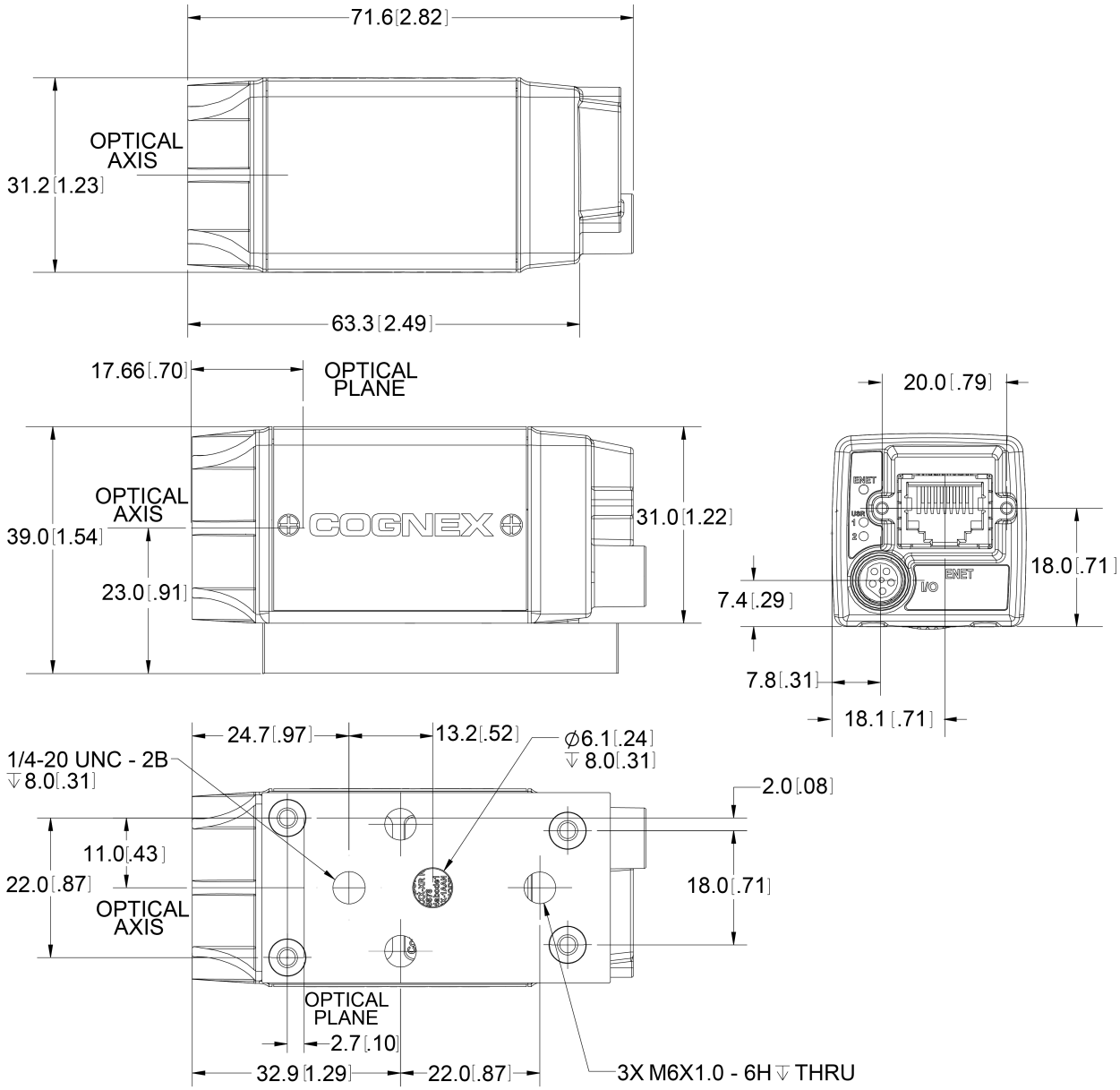

Cleaning/Maintenance

Clean the Housing

To clean the outside of the vision system housing, use a small amount of mild detergent cleaner or isopropyl alcohol on a cleaning cloth. Do not pour the cleaner directly onto the vision system housing.

CAUTION: Do not attempt to clean any In-Sight product with harsh or corrosive solvents, including lye, methyl ethyl ketone (MEK) or gasoline.

Clean the Vision System Image Sensor Window

To remove dust from the outside of the image sensor window, use a pressurized air duster. The air must be free of oil, moisture or other contaminants that could remain on the glass and possibly degrade the image. Do not touch the glass window. If oil/smudges still remain, clean the window with a cotton bud using alcohol (ethyl, methyl or isopropyl). Do not pour the alcohol directly on the window.

Clean the Cover

To remove dust from the lens cover, use a pressurized air duster. The air must be free of oil, moisture or other contaminants that could remain on the lens cover. To clean the plastic window of the lens cover, use a small amount of isopropyl alcohol on a cleaning cloth. Do not scratch the plastic window. Do not pour the alcohol directly on the plastic window.